IMPORTANT: READ CAREFULLY BEFORE USE. KEEP IN SAFE PLACE READY TO CONSULT AT A LATER DATE

Operating instructions

Part 2 - For the customer

for i:SY pedelecs with BOSCH System Controller and BOSCH Kiox 300/500 on-board computer

Skyfly E5 ZR F | Skyfly S10

L-01, L-02

Contents

1 About these operating instructions

1.1 Aim of the instructions for use 8
1.2 Manufacturer 9
1.3 For your information 9
1.3.1 Warnings 9
1.3.2 Markups 9
1.4 Type number and model 10
1.5 Frame number 10
1.6 Identifying the operating instructions 10

2 Safety

2.1 Residual risk 11
2.1.1 Risk of fire and explosion 11
2.1.2 Hot surfaces 12
2.1.3 Electric shock 12
2.1.4 Risk of a crash 12
2.1.5 Risk of amputation 12
2.2 Toxic substances 13
2.2.1 Carcinogenic substances 13
2.2.2 Toxic materials 13
2.2.3 Irritants and corrosive substances 13
2.3 Vulnerable groups 13
2.4 Requirements for the pedelec rider 13
2.5 Personal protective equipment 13
2.6 Safety guards 13
2.7 Safety markings and safety instructions 14
2.8 What to do in an emergency 14
2.8.1 Dangerous situations in road traffic 14
2.8.2 Leaked brake fluid 14
2.8.3 Battery vapour emission 15
2.8.4 Battery fire 15
2.8.5 Oil and lubricant leaks from the fork 15
2.9 Data privacy information 15

3 Description

3.1 Proper use of city and trekking bicycles 16
3.1.1 Improper use 16
3.1.2 Area of use 17
3.2 Technical data 18
3.2.1 Complete BOSCH vehicle 18
3.2.2 Dimensions 19
3.2.3 Environmental requirements 20
3.3 Nameplate 21
3.3.1 Model year 24 21
3.4 Components 22
3.4.1 Overview 22
3.4.2 Chassis 27
3.4.3 Suspension 29
3.4.4 Wheel 31
3.4.5 Brake 36
3.4.6 Saddle 39
3.4.7 Seat post 40
3.4.8 Mechanical drive system 41
3.4.9 Electric drive system 41
3.4.10 Seat post 43

3.4.11 Mechanical drive system 44
3.4.12 Handlebars with BOSCH System Controller with optional Mini Remote control panel 48
3.4.13 Handbrake 57
3.4.14 Gear shift 58
3.4.15 Suspension and damping 60
3.4.16 Battery 63

4 Transporting and storing

4.1 Transportation 64
4.1.1 Using the transport securing system 64
4.1.2 Transporting the pedelec 64
4.1.3 Shipping a pedelec 65
4.1.4 Transporting the battery 65
4.1.5 Shipping the battery 65
4.2 Storing 65
4.2.1 Pedelec 65
4.2.2 On-board computer, display and charger 65
4.2.3 Battery 66
4.2.4 Break in operation 66

5 Installation instructions

5.1 Required tools and materials 68
5.2 Unpacking 68
5.3 Commissioning 69
5.3.1 Checking the battery 69
5.3.2 Preparing the wheel 69
5.3.3 Adjusting the Sonic BOSCH BES3 frame 70
5.3.4 Preparing the wheel 70
5.4 Checking the components 71
5.4.1 Checking the stem and handlebars 71

6 Assembly instructions for online sales

6.1 Unpacking 72
6.2 Preparing 72
6.3 Required tools 72
6.4 Straightening the handlebars 73
6.4.1 Stem with clamping lever version I 73
6.4.2 Stem with clamping lever version II 73
6.5 Stem with screw 73
6.6 Checking the stem and handlebars are in correct position 74
6.6.1 Checking the connections 74
6.6.2 Checking stem is firmly in position 74
6.6.3 Checking the bearing clearance 74
6.7 Fitting the pedals 75

7 Operation

7.1 Risks and hazards 76
7.2 Instruction and customer service 78
7.3 Adjusting the pedelec 78
7.3.1 Preparing 78
7.3.2 Riding position 78
7.3.3 Saddle 79
7.3.4 Handlebars 81
7.3.5 Stem 81
7.3.6 Handles 83
7.3.7 Tyres 83
7.3.8 Brake 84
7.3.9 Determining the sitting position 85

7.3.10	Seat post	86
7.3.11	Saddle	86
7.3.12	Handlebars	91
7.3.13	Stem	92
7.3.14	Handles	94
7.3.15	Tyres	95
7.3.16	Brake	96
7.3.17	Control panel and gear shift	99
7.3.18	Riding light	100
7.3.19	Adjusting the BOSCH System Controller/Mini Remote	102
7.4	Accessories	105
7.4.1	Child seat	105
7.4.2	Trailers	106
7.4.3	MonkeyLoad system	107
7.4.4	Front baskets	110
7.4.5	Panniers and cargo boxes	111
7.4.6	Saddle	112
7.4.7	Seat post	113
7.4.8	Saddle tensioner	113
7.4.9	Adjustable stem	114
7.4.10	Handlebars	114
7.4.11	Leather handles	114
7.4.12	Folding pedals	114
7.4.13	Protective covers	115
7.4.14	Two-leg stand	115
7.4.15	Lock chain	116
7.4.16	Adapter	116
7.4.17	Rear mirror	116
7.4.18	ROHLOFF gear hub tool	116
7.5	Personal protective equipment and accessories for road safety	117
7.6	Before each ride	117
7.7	Using the battery	118
7.7.1	Inserting the battery	118
7.7.2	Removing the battery	118
7.7.3	Charging the battery	118
7.8	Straightening the quickly adjustable stem	120
7.9	Lowering the pedals	120
7.10	Using the pannier rack	121
7.11	Raising the kickstand	121
7.12	Using the saddle	121
7.12.1	Using the leather saddle	122
7.13	Using the pedals	122
7.14	Using the bell	122
7.15	Using the handlebars	122
7.15.1	Using multi-position handlebars	122
7.15.2	Using bar ends	123
7.15.3	Using leather handles	123
7.16	Using the electric drive system	124
7.16.1	Switching on the electric drive system	124
7.16.2	Switching off the electric drive system	124
7.17	Using the control panels	125
7.17.1	Set the level of assistance	125
7.17.2	Using the riding light	125
7.17.3	Using the push assist system	125
7.18	Using the brake	127
7.18.1	Using the handbrake	127
7.18.2	Using the back-pedal brake	127
7.19	Brakes	128
7.19.1	Using the handbrake	128

7.19.2 Using the back-pedal brake 128
7.20 Switching gears 128
7.20.1 Using the derailleur gears 128
7.20.2 Using pinion gears 129
7.20.3 Using a SHIMANO hub gear 130
7.20.4 Using a SHIMANO hub gear 131
7.21 Adjusting the suspension fork 132
7.21.1 Adjusting the suspension fork suspension 132
7.22 Parking 133
7.22.1 Screwing in the quickly adjustable stem 134
7.23 Folding up the pedal 134
7.23.1 Activating the lock function 135

8 Cleaning, servicing and inspection

8.1 Before each ride 136
8.1.1 Checking the safety guards 136
8.1.2 Checking the frame 136
8.1.3 Checking the fork 136
8.1.4 Checking the rear frame damper 137
8.1.5 Checking the pannier rack 137
8.1.6 Checking the guards 137
8.1.7 Check wheel concentricity 137
8.1.8 Checking the quick releases 137
8.1.9 Checking the suspension seat post 137
8.1.10 Checking the bell 137
8.1.11 Checking the handles 137
8.1.12 Checking the riding light 137
8.1.13 Checking the brake 138
8.2 After every ride 138
8.2.1 Cleaning the riding light and reflectors 138
8.2.2 Cleaning the brake 138
8.2.3 Cleaning the suspension fork 138
8.2.4 Cleaning the suspension seat post 138
8.2.5 Servicing the suspension fork 138
8.2.6 Cleaning the rear frame damper 138
8.2.7 Cleaning the pedals 138
8.3 Basic cleaning 138
8.3.1 Remove and clean by hand 138
8.3.2 Cleaning the stem 138
8.3.3 Cleaning the handlebars 138
8.3.4 Cleaning the handles 139
8.3.5 Cleaning the seat post 139
8.3.6 Cleaning the saddle 139
8.3.7 Cleaning the tyres 139
8.3.8 Cleaning the spokes and spoke nipples 139
8.3.9 Cleaning the hub 139
8.3.10 Cleaning the switching elements 139
8.3.11 Cleaning the SRAM AXS rear derailleur 140
8.3.12 Cleaning the cassette, chain wheels and front derailleur 140
8.3.13 Cleaning the brake 140
8.3.14 Cleaning the brake disc 140
8.3.15 Cleaning the belt 140
8.3.16 Cleaning the chain 140
8.4 Servicing 141
8.4.1 Servicing the frame 141
8.4.2 Servicing the fork 141
8.4.3 Caring for the pannier rack 141
8.4.4 Servicing the mudguard 141
8.4.5 Servicing the kickstand 141

8.4.6 Servicing the stem 141
8.4.7 Caring for handlebars 141
8.4.8 Caring for the handles 141
8.4.9 Servicing the seat post 142
8.4.10 Caring for the rims 142
8.4.11 Caring for the leather saddle 142
8.4.12 Servicing the hub 142
8.4.13 Servicing the spoke nipples 142
8.4.14 Servicing the gear shift 142
8.4.15 Servicing the pedals 143
8.4.16 Servicing the chain 143
8.4.17 Servicing the brake 143
8.5 Inspection 144
8.5.1 Checking the wheel 144
8.5.2 Checking the brake system 146
8.5.3 Check chain 147
8.5.4 Checking the chain tension 147
8.5.5 Checking the chain for wear 148
8.5.6 Checking the belt 149
8.5.7 Checking the riding light 150
8.5.8 Checking the stem 151
8.5.9 Checking the handlebars 151
8.5.10 Checking the saddle 151
8.5.11 Checking the seat post 151
8.5.12 Checking the pedal 151
8.5.13 Checking the gear shift 151

9 Inspection and maintenance

9.1 Initial inspection 153
9.2 Carrying out the initial inspection 153
9.3 Major inspection 154
9.4 Component-specific maintenance 154

10 Troubleshooting, fault clearance and repair

10.1 Preventing pain 157
10.1.1 Sitting discomfort 158
10.1.2 Pain in hips 158
10.1.3 Backache 158
10.1.4 Pain in shoulders and nape of neck 159
10.1.5 Numb or aching hands 159
10.1.6 Pain in upper thigh 159
10.1.7 Knee pain 160
10.1.8 Pain in the foot 160
10.2 Kiox 300 and Kiox 500 drive system 161
10.2.1 Drive system or on-board computer does not start up 161
10.2.2 Errors in assistance function 162
10.2.3 Battery errors 163
10.2.4 Display screen errors 164
10.2.5 Lighting does not work 164
10.2.6 BOSCH System Controller 165
10.2.7 Correcting disc brake faults 167
10.2.8 Problems with the Rohloff hub gear 168
10.2.9 Correcting freewheel faults 170
10.2.10 Correcting lighting faults 171
10.2.11 Correcting faults in tyres 171
10.2.12 Correcting control seat post faults 171
10.2.13 Correcting other faults and errors 172
10.2.14 Replacing pedelec components if lock function is installed 173

11 Recycling and disposal

12 Documents

12.1 Operating instructions for pinion 182

13 Glossary

14 Appendix

I. Translation of the original EC Declaration of Conformity 187
II. Directive declaration of conformity with RED Directive 188
III. CE Declaration of Conformity 189

15 Keyword index

Copyright

© i:SY GmbH Co. KG

Distribution or reproduction of these operating instructions and utilisation or communication of their content is prohibited unless expressly approved. Anyone who does not comply with these restrictions is liable for damages. All rights reserved in the event that a patent, utility model or industrial design is registered.

Subject to internal changes

The information contained in these *operating instructions* are the approved technical specifications at the time of printing. In addition to the functions described here, the software may be modified at any time to rectify errors and extend functions.

Any significant changes are included in a new published version of the operating instructions. All changes and new versions of the operating instructions are published on the following website:

www.isy.de/gb-en/

Editing

Text and images:
ZEG Zweirad-Einkaufs-Genossenschaft eG
Longericher Strasse 2
50739 Köln, Germany

Translation

ElaN Languages GmbH
Bonner Strasse 484
50968 Köln, Germany

Contact if you have any questions or problems, or wish to have a printed copy of these operating instructions:

tecdoc@zeg.de

1 About these operating instructions

1.1 Aim of the instructions for use

I:SY pedelecs are premium quality vehicles. You have made an excellent choice. Your specialist dealer will provide you with guidance and instruction and assemble your product. Your specialist dealer will also be happy to assist you in the future, whether you require maintenance, a retrofit or repair.

The instructions for use aim to provide you with the information you need to use your new pedelec effectively and safely throughout its entire lifecycle while also avoiding misuse.

The operating instructions are designed for pedelecs that are purchased directly from a specialist dealer.

Please take time to become familiar with your new pedelec. Once you have read the instructions for use, you will be able to:

- Identify and avoid dangers that the pedelec entails
- Understand the pedelec's different components
- Following an online purchase, assemble the pedelec and adjust it for the rider's size
- using the pedelec,
- Clean the pedelec
- Inspect the pedelec
- Detect simple faults on the pedelec, correct faults and prevent misuse
- Schedule maintenance
- Dispose of the pedelec in the correct manner.

Use the tips and suggestions in the operating instructions. They will help you to enjoy your pedelec for a long time to come.

Download the operating instructions onto your phone at the following link so that you can use them when you are out riding:

www.isy.de/gb-en/

1.2 Manufacturer

i:SY GmbH Co. KG
Longericher Strasse 2
50739 Köln, Germany

Tel. +49 5744 900 910
Email: juergen.schreiber@fes-frankfurt.de
Website: www.isy.de/gb-en/

1.3 For your information

1.3.1 Warnings

Warnings indicate hazardous situations and actions. You will find three categories of warnings in the operating instructions:

⚠WARNING May lead to serious or even fatal injuries if ignored. Medium-risk hazard.

⚠CAUTION May lead to minor or moderate injuries if ignored. Low-risk hazard.

Notice May lead to material damage if ignored.

1.3.2 Markups

You will find ten text markups in the operating instructions:

Stylised form	Use
Underlined in blue	Link
Underlined in grey	Cross references
✓	Requirements
▶	Instructions for actions with no specific order
3	Instructions for actions in specified order
⇨	Result of the action
LOCKED	Indicators on the display screen
•	Bulleted lists
Only applies to pedelecs with this equipment	A notice beneath the heading indicates components which can be used as an option

Table 1: Markups

1.4 Type number and model

These operating instructions are an integral part of pedelecs with the type numbers:

Type no.	Model	Pedelec type
L-01	Skyfly E5 ZR F	City and trekking bicycle
L-02	Skyfly S10	City and trekking bicycle

Table 2: Type number, model and pedelec type

1.5 Frame number

Each frame has an individual frame number stamped on it (see Figure 2). The frame number can be used to link the pedelec with the owner. The frame number is the most important identifier for verifying ownership.

1.6 Identifying the operating instructions

The operating instructions identification number is located in bottom left-hand corner of each page.

The identification number is composed of the document number, the version number and the release date.

Identification number	Part 2/3_MY23I0a - EN_1.0_20.12.2024

2 Safety

2.1 Residual risk

2.1.1 Risk of fire and explosion

Never charge if there is a critical fault

If a charger is connected to the drive system when a critical fault is reported, the battery may be damaged permanently and may catch fire.

▶ Connect charger to fault-free electric drive system only.

Protect against water ingress

The battery is only protected from spray water. Penetration by water can cause a short circuit. The battery may self-ignite and explode.

▶ Never immerse battery in water.

▶ Take battery out of service if you suspect water has penetrated it.

Avoid heat

Temperatures over 60 °C can also cause liquid to leak from the battery and the battery will become damaged. The battery may self-ignite and explode.

▶ Protect the battery against heat.

▶ Never store the battery next to hot objects.

▶ Never expose battery to continuous direct sunlight.

▶ Avoid wide temperature fluctuations.

Never use incorrect charger

Chargers with excessive voltage damage batteries. This may cause a fire or an explosion.

▶ Charge approved batteries only.

Prevent short circuit due to interconnection

Metal objects may interconnect the battery's electrical terminals. The battery may self-ignite and explode.

▶ Never insert paper clips, screws, coins, keys and other small parts into the battery.

▶ Place the battery on clean surfaces only. Prevent charging socket and contacts against contamination from dirt, sand and similar.

Handling a damaged or faulty battery

Faulty batteries are hazardous goods. These include:

- Batteries which have leaked or discharged gas
- Cells or batteries which have sustained external or physical damage.

The safety electronics may fail if the batteries are damaged or faulty. The residual voltage can cause a short circuit. The battery may self-ignite and explode.

▶ Only use and charge battery and accessories if they are in perfect condition.

▶ Never open or repair the battery.

▶ Batteries with external damage must be removed from service immediately.

▶ If a battery is dropped or struck, remove it from service and keep it under observation for at least 24 hours.

▶ Contact specialist dealer.

Dispose of faulty batteries.

▶ Take faulty battery to your specialist dealer in your pedelec as quickly as possible. Store the battery in the pedelec until it is taken away for transport.

Avoid overheating in the charger

The charger heats up when it is charging the battery. If it is not allowed to cool down sufficiently, it can cause a fire or burns to the hands.

- ▶ Never use charger on a highly flammable surface.
- ▶ Never cover the charger during charging.
- ▶ Never leave battery unattended during charging.

2.1.2 Hot surfaces

The brakes, hubs and the motor may become very hot when in operation. There is a risk of burns or fire in case of contact.

- ▶ Never touch the brakes or the motor immediately after a ride.
- ▶ Never place the pedelec on a flammable surface, such as grass or wood, directly after use.

2.1.3 Electric shock

Never use damaged network components

Damaged chargers, cables and plug connectors increase the risk of electric shock.

- ▶ Check the charger, cable and plug connector before each use. Never use a damaged charger.

Avoid water ingress

If water penetrates into the charger, there is a risk of electric shock.

- ▶ Use the charger indoors only.

Dealing with condensate

Condensation may form in the charger and battery when the temperature changes from cold to hot, causing a short circuit.

- ▶ Wait until both charger and battery are at room temperature before connecting them.

2.1.4 Risk of a crash

Adjusting quick release correctly

Excessively high clamping force will damage the quick release and cause it to lose its function. Insufficient clamping force will result in unfavourable transmission of force. This can cause components to break. This will result in a crash with injuries.

- ▶ Only use the clamping lever with the specified set clamping force.
- ▶ Contact specialist dealer if the quick release has lost clamping force.

2.1.5 Risk of amputation

The brake disc in disc brakes is so sharp that it can cause serious injuries to fingers if they are inserted into the brake disc openings.

The chain wheels and belt sprockets can draw in fingers, thus causing serious injuries to fingers.

- ▶ Always keep fingers well away from rotating brake discs and the chain or belt drive.

2.2 Toxic substances

2.2.1 Carcinogenic substances

Suspension oil

If you come into contact with the suspension oil in the fork or the rear frame damper, it will irritate the respiratory tract and can cause cancer, sterility and changes to the genetic make-up of germ cells oil cause.

▶ Never dismantle the rear frame damper or the suspension fork.

2.2.2 Toxic materials

Brake fluid

Brake fluid may leak out after an accident or due to material fatigue. Brake fluid can be fatal if swallowed or inhaled.

▶ Never dismantle the brake system.

Suspension oil

The suspension oil in the fork and the rear frame damper is toxic to the touch.

▶ Never dismantle the rear frame damper or the suspension fork.

2.2.3 Irritants and corrosive substances

Defective battery

Liquids and vapours may leak from damaged or faulty batteries. Excessively high temperatures may also cause liquids and vapours to leak from the battery. Such liquids and vapours can irritate the airways and cause burns.

▶ Never dismantle the battery.

▶ Never inhale vapours.

2.3 Vulnerable groups

▶ Keep batteries and the charger away from children and people with reduced physical, sensory or mental capacities or lacking in experience and knowledge.

▶ Children and young people must be provided with comprehensive instructions by a legal guardian.

2.4 Requirements for the pedelec rider

The pedelec rider must have adequate physical, motor and mental abilities to ride on public roads. A minimum age of 14 years is recommended. The area of use is labelled on the nameplate. Experience as defined in EN 17406 is also required.

2.5 Personal protective equipment

▶ Wear sturdy shoes.

▶ Wear tight-fitting clothes only. Wear clothing which is as bright or retroreflective as possible.

▶ Wear a suitable helmet.

▶ Wear gloves.

▶ Wear well-fitting glasses.

2.6 Safety guards

Three safety guards on the pedelec protect pedelec riders against heat, dirt or moving parts:

- the motor cover
- the battery cover
- the chain guard.

▶ Never remove the safety guards.

▶ Check the safety guards on a regular basis.

▶ Take pedelec out of service if a guard is damaged or missing. Contact specialist dealer.

2.7 Safety markings and safety instructions

Pedelec and battery nameplates contain the following safety markings and safety instructions:

Symbol	Explanation
	General warning signs
	Warning of explosive substances
	Warning of hot surfaces
	Adhere to the instructions for use
	No naked flames

Table 3: Safety markings

Symbol	Explanation
	Collect ordinary batteries and rechargeable batteries separately.
	It is forbidden to open any type of battery.
	Protect from temperatures above 50 °C and direct sunlight

Table 4: Safety instructions

2.8 What to do in an emergency

2.8.1 Dangerous situations in road traffic

▶ If you encounter any hazards or dangers in road traffic, apply the brake until the pedelec comes to a halt.

2.8.2 Leaked brake fluid

▶ Avoid contact with skin and eyes. Wear gloves and safety gloves as protective equipment. Remove any clothing contaminated with brake fluid immediately.

▶ Take care with leaked brake fluid as it poses a slip hazard.

▶ Keep leaked brake fluid away from naked flames, hot surfaces and sources of ignition.

After skin contact

1 Wash affected skin with soap and water and rinse well.

2 Remove contaminated clothing.

3 Consult doctor in the event of pain or discomfort.

After contact with eyes

1 Rinse eyes under flowing water for at least ten minutes with the lids open; also rinse under lids.

2 Immediately consult a doctor in case of any pain or discomfort.

Environmental protection measures

▶ Never allow brake fluid to flow into sewage, water courses or groundwater.

▶ Notify the relevant authorities if fluid penetrates the ground, water courses or the sewage system.

▶ Dispose of leaking brake fluid in an environmentally responsible way in accordance with statutory regulations.

▶ The brake system must be repaired immediately if brake fluid leaks out. Contact specialist dealer.

2.8.3 Battery vapour emission

Vapours may be emitted if the battery is damaged or used improperly. The vapours may cause respiratory tract irritation.

1 Get into fresh air.

2 Consult doctor in the event of pain or discomfort.

After contact with eyes

1 Carefully rinse eyes with plenty of water for at least 15 minutes. Protect unaffected eye.

2 Seek medical advice immediately.

After skin contact

1 Remove any solid particles immediately.

2 Remove contaminated clothing immediately.

3 Rinse the affected area with plenty of water for at least 15 minutes.

4 Then dab the affected skin gently. Do not rub dry.

5 Immediately consult a doctor if there is any redness, pain or discomfort.

2.8.4 Battery fire

The safety electronics may fail if the battery is damaged or faulty. The residual voltage can cause a short circuit. The battery may self-ignite and explode.

1 Keep your distance if the battery becomes deformed or starts to emit smoke.

2 If charging, remove the plug connector from the socket.

3 Contact the fire service immediately.

▶ Use Class D fire extinguishers to put out the fire.

▶ Never extinguish damaged batteries with water or allow them to come into contact with water.

Inhaling vapours can cause intoxication.

▶ Stand on the side of the fire where the wind is blowing from.

▶ Use breathing apparatus if possible.

2.8.5 Oil and lubricant leaks from the fork

▶ Dispose of leaked oils and lubricants in an environmentally responsible way as per statutory regulations (see Section 10.1).

▶ Contact specialist dealer.

2.9 Data privacy information

When the pedelec is connected to the diagnosis tool at the specialist dealer’s, data is transferred to BOSCH eBike Systems (Robert Bosch GmbH) on the use of the Bosch drive unit, including its energy consumption and temperature, to help improve the product.

You will find more information on the Bosch eBike website:

▶ www.bosch-ebike.com.

3 Description

3.1 Proper use of city and trekking bicycles

All checklists and instructions for actions in these operating instructions must be observed. Specialist staff are permitted to install approved accessories.

Use the pedelec when it is in perfect, proper working order only. National requirements may apply to the pedelec which the standard equipment may not meet. Different regulations apply across the country to the riding light, reflectors and other components when riding on public roads. The general laws and the regulations on accident prevention and environmental protection in the respective country of use must be observed.

The rechargeable batteries are designed to supply power to the pedelec motor only. Never use the batteries for other purposes. Pedelec type

Each pedelec is assigned a pedelec type, which determines its proper use, function and area of use.

City and trekking bicycle
City and trekking bicycles are designed for comfortable, daily use and are suitable for riding on public roads.

Table 5: Proper use

3.1.1 Improper use

Failure to adhere to the pedelec's proper use poses a risk of personal injury and material damage. It is prohibited to use the pedelec in the following ways:

- When the electrical drive system has been manipulated
- Changing, eliminating or effacing frame numbers, nameplates or component serial numbers, or manipulating them in any other way
- Riding with a damaged or incomplete pedelec
- Riding over steps
- Riding through deep water
- Charging with an incorrect charger
- Lending the pedelec to untrained pedelec riders
- Carrying other people on the pedelec
- Riding with excessive baggage
- Riding with no hands
- Riding on ice and snow
- Improper servicing
- Improper repair
- Tough areas of use, such as professional competitions
- Acrobatics, riding up ramps, stunt riding or flying stunts.

City and trekking bicycle
City and trekking bicycles are not sports bicycles. If used for sports, the rider can expect reduced riding stability and diminished comfort.

Table 6: Improper use

3.1.2 Area of use

3.1.2.1 From model year 2024 onwards as per EN 17406

	Area of use	Average speed [km/h]	Unsuitability
1 EN 17406	Use on normal, paved surfaces where the tyres should maintain contact with the ground at average speed with occasional jumps.	15 ... 25	• Never ride off road. • Never perform jumps over 15 cm.
2 EN 17406	The area of use specified in Condition 1 applies. The vehicle can also be used on unpaved roads and gravel paths with moderate upward and downward slopes. Under these conditions, the bike may come into contact with uneven terrain and tyres may lose contact with the ground repeatedly.	15 ... 25	• Never ride off road. • Never perform jumps over 15 cm.
3 EN 17406	The area of use specified in Condition 2 applies. The vehicle can also be used on rough paths, bumpy roads, difficult terrain and unde-veloped tracks. Practice and technical skill is required for such rides.	Not relevant	• Never perform jumps over 60 cm. • Never use vehicle without practice. • Never use vehicle if you have no technical skills.
4 EN 17406	The area of use specified in Condition 3 applies. The vehicle can also be used on descents on unpaved tracks at speeds up to 40 km/h.	Not relevant	• Never perform jumps over 120 cm. • Never use vehicle without practice. • Never use vehicle if you have no technical skills and are unable to handle a bike.
5 EN 17406	The area of use specified in Condition 4 applies. The vehicle can also be used for extreme jumps or descents on unpaved tracks at speeds of more than 40 km/h or for a combination of the two.	Not relevant	• Never use vehicle without practice. • Never use vehicle if you have no extreme technical skills and are unable to handle the bike.
6 EN 17406	The area of use specified in Condition 1 applies. The vehicle can also be used in competitions or for other purposes at speeds of more than 50 km/h (e.g. descents or sprints).	30 ... 55	• Never ride off road. • Never perform jumps over 15 cm. • Never use vehicle without practice. • Never use vehicle if you have no technical skills.

Table 7: Area of use, average speed and unsuitability

3.2 Technical data

3.2.1 Complete BOSCH vehicle

Power output/system	250 W (0.25 kW)
Shut-off speed	25 km/h
Service life	7 years
Weight	See Section 3.1.3
PTW	See Section 3.1.4

Table 8: Technical data for pedelec

3.2.1.1 Emissions

The safety requirements as per Electromagnetic Compatibility Directive 2014/30/EU have been met. The pedelec and the charger can be used in residential areas without restriction.

A-weighted emission sound pressure level	<70 dB(A)
Total vibration level for the hands and arms	<2.5 m/s²
Highest effective value of weighted acceleration for the entire body	<0.5 m/s²

Table 9: Emissions from the pedelec

3.2.1.2 Environmental requirements

You can ride the pedelec within a temperature range between -5 °C and +40 °C. The electric drive system is limited in its performance outside this temperature range.

Operating temperature	-5 … +40 °C

During winter use, especially at temperatures below 0 °C, we recommend that you don't insert a battery charged and stored at room temperature into the pedelec until just before setting off. We recommend using thermal protection sleeves when riding longer distances at low temperatures.

Temperatures under -10 °C and over +60 °C must be avoided as a general rule. Never put the battery in a car in summer or store it in direct sunlight.

You must also keep within the following temperature ranges.

Transportation temperature	+10 … +40 °C
Storage temperature	+10 … +40 °C
Work environment temperature	+15 … +25 °C
Charging temperature	+10 … +40 °C

The nameplate contains symbols for the pedelec's area of use.

▶ Check what tracks and roads you may ride on before setting off for the first time.

3.2.2 Dimensions

The pedelec may only be loaded to its *maximum permitted total weight* (PTW).

The maximum permitted total weight is

- the weight of the fully assembled pedelec
- plus body weight
- plus baggage.

Type no.	Model	PTW [kg]	Ready-to-use weight [kg]	Max. rider weight [kg]
L-01	Skyfly E5 ZR F	150	17.9/18.8*	120
L-02	Skyfly S10	150	18.9/19.8*	120

Table 10: Type number, model, PTW and maximum body weight
***Weight depends on the battery**

3.2.3 Environmental requirements

3.2.3.1 BOSCH

You can ride the pedelec within a temperature range between -5 °C and +40 °C. The electric drive system is limited in its performance outside this temperature range.

Operating temperature	-5 … +40 °C

During winter use, especially at temperatures below 0 °C, we recommend that you don't insert a battery charged and stored at room temperature into the pedelec until just before setting off. We recommend using thermal protection sleeves when riding longer distances at low temperatures.

Temperatures under -10 °C and over +60 °C must be avoided as a general rule. Never put the battery in a car in summer or store it in direct sunlight.

You must also keep within the following temperature ranges.

Transportation temperature	+10 … +40 °C
Storage temperature	+10 … +40 °C
Work environment temperature	+15 … +25 °C
Charging temperature	+10 … +40 °C

The nameplate contains symbols for the pedelec's area of use.

▶ Check what tracks and roads you may ride on before setting off for the first time.

3.3 Nameplate

3.3.1 Model year 24

The nameplate is situated on the frame. The precise position of the nameplate is shown in Figure 3.
The nameplate contains up to twelve pieces of information.

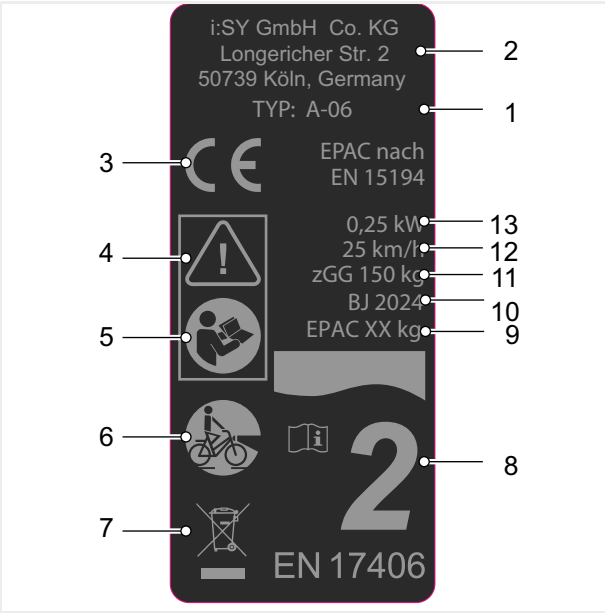

Figure 1: Example of ZEG nameplate

No.	Designation	Description	More information
1	Type number	All pedelec models have an eight-digit type number, which is used to specify the design model year, the type of pedelec and the version.	Section 1.9
2	Manufacturer	You can contact the manufacturer at the address indicated.	Section 1.1
3	CE marking	The manufacturer uses the CE marking to declare that the pedelec complies with applicable requirements.	Section 13
4	Safety markings Caution	The safety markings warn of hazards.	Section 0.40
5	Read operating instructions	Read operating instructions	...
6	Pedelec type	Each pedelec is assigned a pedelec type, which determines its proper use, function and area of use.	Section 3.1.1
7	Disposal instructions	Follow the guidelines on waste disposal when disposing of the pedelec.	Section 10.1
8	Area of use	Ride pedelec in permitted locations only.	Section 3.1.4
9	Weight of the ready-to-ride pedelec (optional; only for pedelecs 25 kg or more)	The weight of the ready-to-ride pedelec is specified as a weight of 25 kg or above and refers to its weight at the time of purchase. Any extra accessories need to be added to the weight.	Section 4.1
10	Year of manufacture	The year of manufacture is the year in which the pedelec was manufactured.	...
11	Maximum permitted total weight (PTW)	The maximum permitted total weight is the weight of the fully assembled pedelec with the body weight plus the baggage.	Section 0.0.1
12	Shut-off speed	The speed that the pedelec reaches at the moment when the current has dropped to zero or to the no-load current value.	...
13	Maximum continuous power rating	The maximum continuous power rating is the greatest possible power for the electric motor output shaft over 30 minutes.	...

Table 11: Explanation of information on the nameplate

3.4 Components

3.4.1 Overview

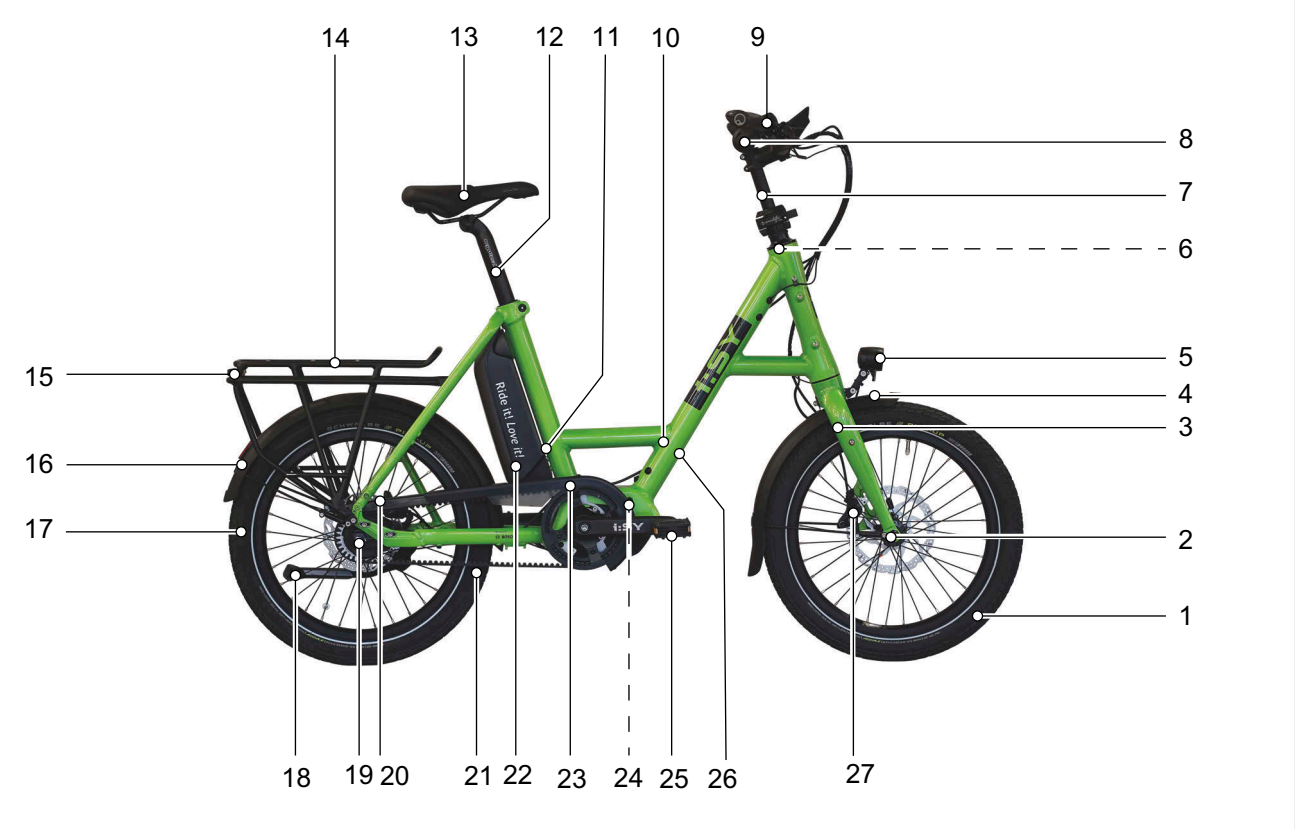

Figure 2: Pedelec viewed from right

1	Wheel	11	Nameplate	20	Disc brake
2	Hub	12	Seat post	21	Belt
3	Fork	13	Saddle	22	Battery
4	Guard	14	Pannier rack	23	Chain guard
5	Front light	15	Rear light	24	Motor
6	Steering headset	15	Reflector	25	Folding pedal
7	Handlebar extension	16	Guard	26	Frame number
8	Handlebars	17	Wheel	27	Disc brake
9	Stem	18	Kickstand		
10	Frame	19	Hub		

3.4.1.1 Components and repair parts for SKYFLY E5 ZR F

L-01

Frame	i:SY, normal carbon frame	Carbon, rigid fork, shaft length: 300 mm
Tyres	SCHWALBE, Super Moto-X	# Size: ETRTO 62-406 (#), version: DD RaceGuard
Tube	SCHWALBE, AV7 (20")	Valve: AV; valve length: 40 mm Size: ETRTO 40/62-406; version: Standard
Rim band	TAPIR, 6781	Size: 8 mm × 2000 mm; thickness: 0.30 mm Colour: Yellow
Rim	RYDE, Disc 30 #	14G, 32H; see Section #
Spoke	MACH1, Plus	14G, Ø: 2 mm; length: 179 mm; see Section #
		14G, Ø: 2 mm; length: 152 mm; see Section #
Spoke nipples	SAPIM, Polyax	Inside Ø: 14G; length: 14 mm
Front wheel hub	SHIMANO, DEORE HB-M6000	32H; see Section #
Rear wheel hub	SHIMANO, NEXUS SG-C7000-5D	Mechanical gear hub, 5-speed, 32H
Steering headset	HAOJIE, GH-236	# ZS56/31.8|/ 40
Stem variant	BY.SCHULZ, Speedlifter Twist	# Stem extension, #extension height: 220 mm (T22), shaft Ø: # mm; reducing sleeve height: # mm; see Section #
	BY.SCHULZ, Speedlifter Twist Pro SDS	# Height-adjustable stem; #extension height: 170 mm (T17); #stem length: 55 mm; see Section #
Stem	SATORI, TDS-D507G-8FOV	# Ø: 31.8 mm; extension: 70 mm; see Section #
Handlebars	SATORI, Roxetta	Length: 660, see Section #
Handles/tapered	Ergon, GC1	Winged grips, NEXUS
Fork	i:SY carbon	Carbon, rigid fork, shaft length: 300 mm
Saddle	VELO CYCLE, ZECURE VL-6483 L	# Size: L
Seat post	SATORI, Camber (SP-387)	Patented seat post, Ø: 34.9 mm; length: 415 mm; see Section #
Saddle clamp	HAOJIE	...
Pedal	i:SY, folding pedal	See Section #
Crank set	#, Magan 4 (110058)	Crank length: 160 mm, ISIS
Chain/belt	GATES®, 122T CDX (11M-122T-12C)	# Belt, polyurethane/carbon; pitch: 11, number of teeth: 122; width: 12 mm; length: 1320 mm
Chain wheel/belt sprocket	GATES®, 52T CDC with 5 screws (CF1152B5AT)	Belt sprocket, 52T
Chain guard	HORN, Catena A08/38	Plastic, #129203
Sprocket/belt sprocket/ freewheel	GATES®, SHIMANO Inter-5E SF 6L combined (CT1130YMN-U)	Belt sprocket, 30T
Shifter	SHIMANO, NEXUS SL-C7000-5	Twist grip shifter with indicator, 5-speed; see Section #
Motor	BOSCH, Performance Line SX [BDU3144] (EB11.100.00V)	See Section 3.5.06.1
On-board computer	BOSCH, SystemController [BRC3100] (EB13.100.000)	See Section #
Display	BOSCH, Kiox 500 [BHU3700] (EB13.100.004)	See Section #
Control panel	BOSCH, Mini-Remote [BRC3300] (EB13.100.001)	See Section #
Battery	BOSCH, PowerPack Frame 545 [BBP3550] (EB12.100.02J)	#

Charger	BOSCH, 4A charger [BPC3400] (EB12.110.001)	Charging current (max.): 4 A, 220-240 V; see charger instructions
Front brake	TEKTRO, # HD-T532	# 3-finger brake lever | Length: 1200 mm/ Hydraulic disc brake, 2-piston
Rear brake		# 3-finger brake lever | Length: 1800 mm/ Hydraulic disc brake, 2-piston
Front brake disc	TEKTRO, TR-45	Ø: 180 mm
Rear brake disc	TEKTRO, TR-45	Ø: 160 mm
Headlight	FUXON, FF-100 EB HB/FFB-23S	Light cable length: 1300 mm Remote controller cable: 1200 mm; see Section #
Rear light	FUXON, RL-130	#
Reflectors	BUSCH&MÜLLER, 313/3Z1	Fitted on pannier rack (fitting size: 50 mm) with two screws; see Section #
Pannier rack, rear	HAOJE, HJ11CA12-22-07	...
Guard	SUNNYWHEEL, SW-FA-311-70F	Width: 70 mm
Stand	PLETSCHER, Comp 40	Kickstand
Bell/horn	WIDEK, e-bike	Bell
Battery lock	ABUS, #	

...not available

Information not available when document was produced

3.4.1.2 Components and repair parts for SKYFLY S10

L-02

Frame	i:SY, normal carbon frame	Carbon, frame size: 48 cm
Tyres	SCHWALBE, Super Moto-X	# Size: ETRTO 62-406 (#), version: DD RaceGuard,
Tube	SCHWALBE, AV7 (20")	Valve: AV; valve length: 40 mm Size: ETRTO 40/62-406; version: Standard
Rim band	TAPIR, 6781	Size: 8 mm × 2000 mm; thickness: 0.30 mm Colour: Yellow
Rim	RYDE, Disc 30 #	14G, 32H; see Section #
Spoke	MACH1, Plus	14G, Ø: 2 mm; length: 179 mm; see Section #
Spoke nipples	SAPIM, Polyax	Inside Ø: 14G; length: 14 mm
Front wheel hub	SHIMANO, DEORE HB-M6000	32H; see Section #
Rear wheel hub	SHIMANO, DEORE FH-M6000	Freewheel hub, 32H; see Section #
Steering headset	HAOJIE, GH-236	# ZS56/31.8|/ 40
Stem	BY.SCHULZ, Speedlifter Twist	# Stem extension, #extension height: 220 mm (T22), shaft Ø: # mm; reducing sleeve height: # mm; see Section #
	SATORI, TDS-D507G-8FOV	# Ø: 31.8 mm; extension: 70 mm; see Section #
Handlebars	SATORI, Roxetta	Length: 660, see Section #
Handles/tapered	Ergon, GC1	Winged grips, NEXUS
Fork	i:SY carbon	Carbon, rigid fork, shaft length: 300 mm
Saddle	VELO CYCLE, ZECURE VL-6483 L	# Size: L
Seat post	SATORI, Camber (SP-387)	Patented seat post, Ø: 34.9 mm; length: 415 mm; see Section #
Saddle clamp	HAOJIE	...
Pedal	i:SY, folding pedal	See Section #
Crank set	#, Magan 4 (110058)	Crank length: 160 mm, ISIS
Chain/belt	SHIMANO, CN-LG500	Chain, # links; see Section #
Chain wheel/belt sprocket	MIRANDA, CL59	# Chain wheel: 42T/Spider; see Section #
Chain guard	HORN, Catena A08	Plastic, #
Rear derailleur	SHIMANO, TIAGRA RD-4700-GS	See Section #
Sprocket/belt sprocket/ freewheel	SHIMANO, CS-HG500-10 (12-28T)	Cassette, 10-speed, 12-13-14-15-17-19-21-23-25-28T (12-28T); see Section #
Shifter	SHIMANO, CUES SL-U6000-10R	Shifter with indicator, 10-speed
	SHIMANO, DEORE SL-T6000-R	Shifter with indicator, 10-speed
	SHIMANO, TIAGRA SL-4700	Shifter with indicator, 10-speed
Motor	BOSCH, Performance Line SX [BDU3144] (EB11.100.00V)	See Section 3.5.06.1
On-board computer	BOSCH, SystemController [BRC3100] (EB13.100.000)	See Section #
Display	BOSCH, Kiox 500 [BHU3700] (EB13.100.004)	See Section #
Control panel	BOSCH, Mini-Remote [BRC3300] (EB13.100.001)	See Section #

Battery	BOSCH, PowerPack Frame 400 [BBP3540] (EB12.100.00I)	See Section #
	BOSCH, PowerPack Frame 545 [BBP3550] (EB12.100.02J)	#
Charger	BOSCH, 4A charger [BPC3400] (EB12.110.001)	Charging current (max.): 4 A, 220-240 V; see charger instructions
Front brake	TEKTRO, # HD-T532	# 3-finger brake lever | Length: 1200 mm/ Hydraulic disc brake, 2-piston
Rear brake	TEKTRO, # HD-T532	# 3-finger brake lever | Length: 1800 mm/ Hydraulic disc brake, 2-piston
Front brake disc	TEKTRO, TR-45	Ø: 180 mm
Rear brake disc	TEKTRO, TR-45	Ø: 160 mm
Headlight	FUXON, FF-100 EB HB/FFB-23S	Light cable length: 1300 mm Remote controller cable: 1200 mm; see Section #
Rear light	FUXON, RL-130	#
Reflectors	BUSCH&MÜLLER, 313/3Z1	Fitted on pannier rack (fitting size: 50 mm) with two screws; see Section #
Guard	SUNNYWHEEL, SW-FA-311-70F	Width: 70 mm
Stand	PLETSCHER, Comp 40	Kickstand
Bell/horn	WIDEK, e-bike	Bell
Battery lock	ABUS, #	

...not available

Information not available when document was produced

K-01

3.4.2 Chassis

The chassis comprises two components:

- frame
- steering system.

3.4.2.1 Frame

The frame absorbs all forces which act on the pedelec from the rider's body weight, pedalling and the ground. The frame also acts as a support for most components.

The frame geometry determines the pedelec's ride performance. A frame comprises the following elements:

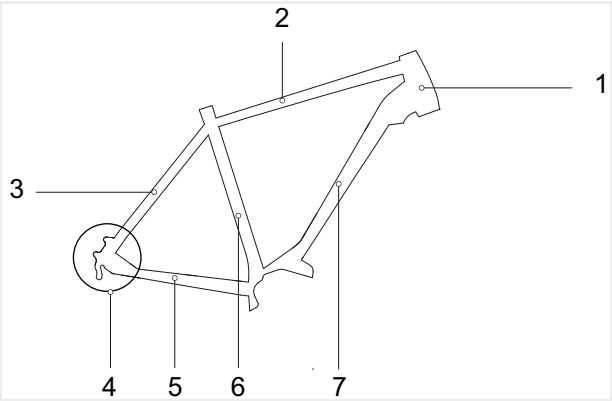

Figure 3: Frame elements

1 Head tube
2 Top tube
3 Rear frame seat stay
4 Rear frame fork end
5 Chain stay
6 seat tube
7 Down tube

3.4.2.2 Steering system

The steering system components are:

- Steering headset,
- Stem,
- Handlebars and
- Fork.

3.4.2.3 Steering headset

The steering headset (also known as a bike headset or simply a headset) is the fork bearing system in the frame. A distinction is made between two different types:

- Conventional steering headsets for fork steerers with thread
- Steering headsets for threadless fork steerers or what are known as headsets.

3.4.2.4 Stem

The stem connects the handlebars to the fork steerer tube. The stem is used to adjust the handlebars to the rider's body size. The stem is used to adjust the handlebar height and the gap between the handlebars and saddle (see Section 6.5.6).

Quickly adjustable stems

Quickly adjustable stems are an extension to the fork steerer. You can change the height and angle of quickly adjustable stems without any tools. Up to 3 settings can be adjusted, depending on the model:

1 Adjust handlebar height
2 Adjust twist function
3 Adjust stem angle.

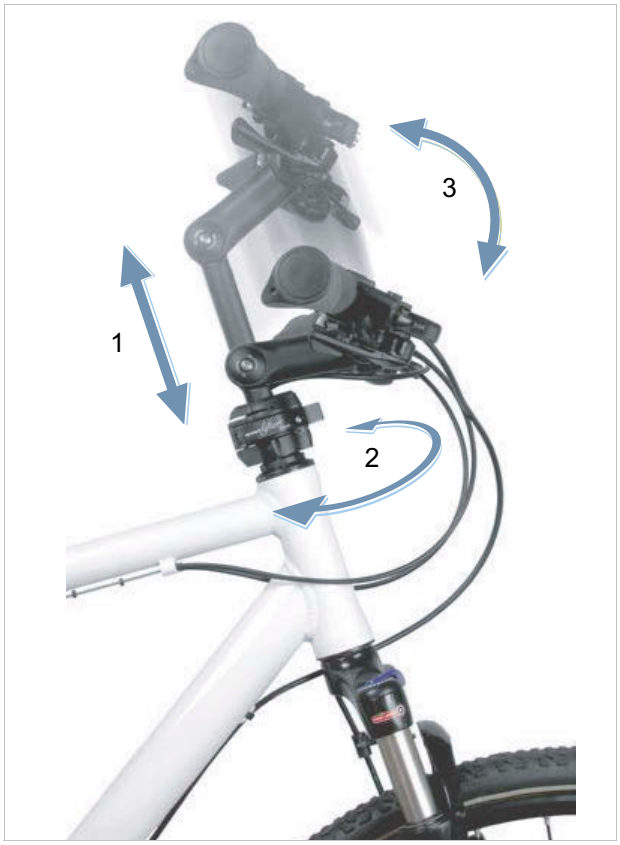

Figure 4: Example – BY.SCHULZ seat Speedlifter Twist Pro SDS

Adjusting the height and stem angle enhances ride comfort by allowing varied riding positions on longer tours. The twist function saves space when parking.

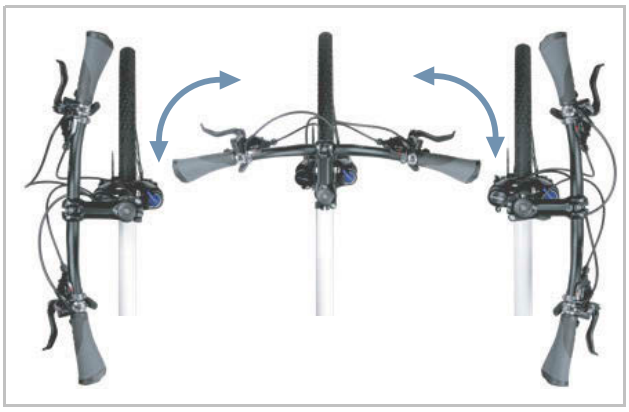

Figure 5: Twist function, using BY.SCHULZ as an example

3.4.2.5 Handlebars

The pedelec is steered using the handlebars. The handlebars are used to support the upper body and is the mount for operating and display components (see Section 3.5.1).

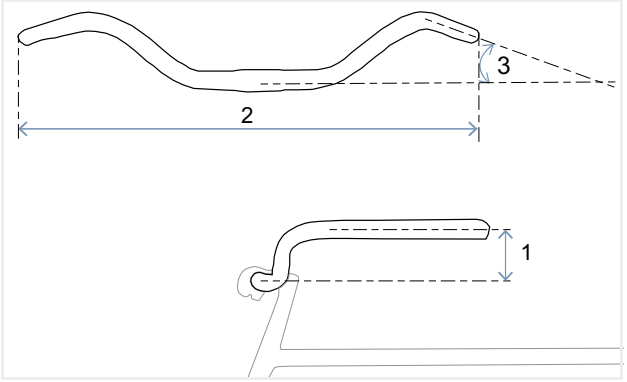

Figure 6: Handlebar dimensions

The main dimensions of handlebars are:

1 Rise
2 Width
3 Backsweep

3.4.2.6 Fork

The stem and handlebars are attached to the top end of the fork steerer. The axle is fastened to the fork ends. The wheel is fastened to the axle.

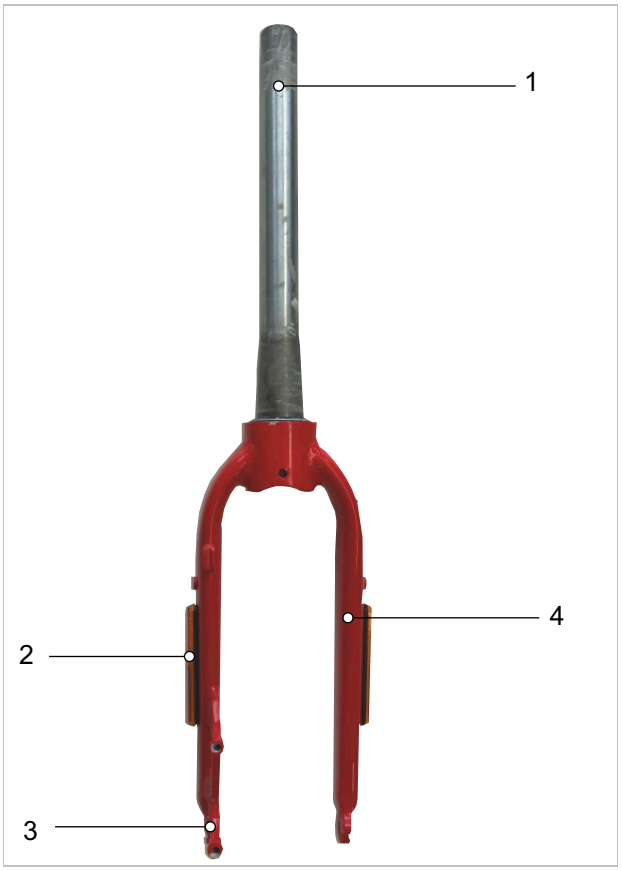

Figure 7: Overview of rigid fork

1 Fork steerer
2 Side reflectors (optional)
3 Fork end
4 Fork leg

Rigid forks are fitted in this model series.

Rigid forks

Rigid forks transfer the used muscle and motor power to the road to optimum effect. Pedelecs with rigid forks consume less energy on steep roads and have a greater range than pedelecs with adjusted suspension.

3.4.3 Suspension

The suspension system in the pedelec comprises 2 components:

- the tyres and
- the optional suspension seat post.

Figure 8: Oscillating system

1 Optional suspension seat post (see Section 3.3.6.2)
2 Tyre suspension

3.4.3.1 Suspension seat post

Suspension seat posts can reduce impact after one-time, hard impacts. Ride comfort can be improved significantly thanks to the brief cushioning.

See Section 3.3.6.2 for more information.

All types of suspension seat posts feature small, heavy-duty slide bearings, guides and articulated joints. If they are not lubricated on a regular basis, the sensitive response behaviour diminishes considerably, causing excessive wear.

Clean and service suspension seat posts on a regular basis (see Section 7.7.6 and Section 7.9.9.1).

3.4.3.2 Tyre suspension

Tyre pressure has a significant effect on ride comfort. Tyres with a high tyre pressure transmit more impacts from uneven roads to the frame and handlebars than tyres with low air pressure.

Soft tyres do not deflect; they absorb smaller bumps in the road thanks to the tyre's sag and ability to deform. Small obstacles therefore have no impact.

It is therefore recommended to use as low a tyre pressure as possible to ensure greater ride comfort (see Section 6.5.8).

3.4.4 Wheel

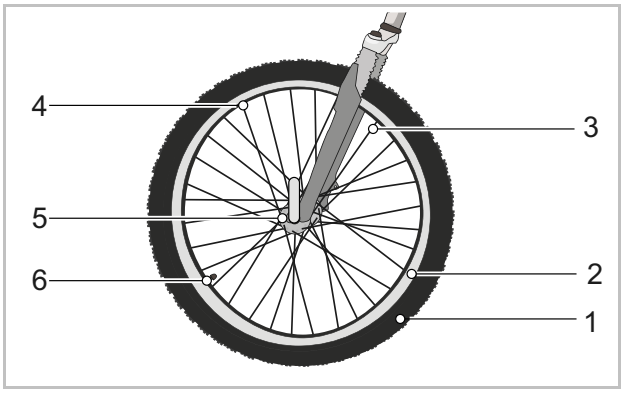

Figure 9: Visible wheel components

1 Tyres
2 Rim
3 Spoke
4 Spoke nipples
5 Hub
6 Tube

The wheel comprises a tyre, an inner tube with a valve and the wheel itself.

3.4.4.1 Tyres

The tyre forms the outer section of the wheel. The tyre is pulled onto the rim. Tyres differ in design, profile and width, depending on their intended use.

Figure 10: Example: Information on tyres

Tyre size

The tyre size is indicated on the side of the tyre.

Tyre pressure

The permitted pressure range is indicated on the side of the tyre. It is indicated in psi or bars. The tyre is only able to support the pedelec if there is adequate tyre pressure. The tyre pressure must be adjusted to the rider's body weight and then checked on a regular basis.

Tyre design types

There are five different tyre design types:

- Tube-type tyres,
- Tubeless tyres *(also tubeless ready)*,
- Tubular tyres, *Tubular or single tube* tyres,
- Solid tyres *Solid tyres*
- Mixed types.

3.4.4.2 Tube-type tyre

A distinction is made between different *types of tube-type tyres*, also known as clinchers:

- Clinchers with steel wire reinforcement in bead core
- Folding tyres with aramid fibre reinforcement in bead core
- Beaded edge tyres without reinforcement in the bead core but with pronounced beads that hook under the rim edge and overlap in the rim well.

Figure 11: Structure of tube-type tyres

1 Rim
2 Tread with profile
3 Puncture protection belt (optional)
4 Carcass
5 Bead core

Carcass

The carcass *is the tyre's* supporting structure. There are usually three carcass plies beneath the tread. The carcass comprises a webbing with threads, usually made of polyamide (nylon). The webbing is coated with rubber on both sides and cut at an angle of 45°. The carcass gives the tyre stability thanks to this cut at an angle to the direction of travel. The carcass plies are woven with different densities, depending on the quality of the tyres. The density of the carcass fabric is indicated by the number of threads per inch, in EPI (*ends per inch*) or TPI (*threads per inch*). There are tyres with between 20 and 127 EPI carcasses.

If the EPI value is higher, the diameter of the threads used is lower. Carcass plies with a higher EPI value have threads with a smaller diameter. The higher the EPI value,

- the less rubber is needed to encase the threads,
- the lighter the tyres are and
- the more flexible the tyres are and they consequently have less rolling resistance.
- The webbing is denser so that it is more difficult for foreign bodies to penetrate. This increases puncture resistance.

In carcasses with 127 EPI, each individual thread is just 0.2 mm thick and, consequently, more susceptible to damage. This means that a 127 EPI tyre offers low puncture protection. 67 EPI offers the optimum compromise between weight and robustness.

Besides the webbing, the tyre's rubber compound is also important. The rubber compound comprises numerous parts:

40 - 60%	Natural and synthetic rubber
15 - 30%	Fillers, e.g. carbon black, silicic acid or silica gel
20 - 35%	• Anti-ageing agent • Vulcanisation agent, e.g. sulphur • Vulcanisation accelerator, e.g. zinc oxide • Pigments and dyes

Table 12: Rubber compound in carcasses

Tread with profile

A rubber tread is attached to the exterior of the carcass.

The tread has little influence on riding characteristics on a smooth road. The grip between the road and tyre is mainly provided by the rolling friction between the rubber and the road surface.

Slicks and road tyres

Unlike cars, a pedelec will not aquaplane. The tread contact is small and the contact pressure high. Thanks to the small contact surface on narrow and treadless tyres, the tyre interlocks with the road surface finish. Theoretically, the tyre will not aquaplane until speeds of 200 km/h are reached.

On a clean road, whether dry or wet, slick tyres will grip more effectively than treaded tyres because the contact surface is larger. The rolling resistance of slick tyres is also lower.

Off-road tyres

The tread is highly important on terrain. In this case, the tread creates an interlock with the ground, thus enabling driving, braking and steering forces to be transmitted. The MTB tread can also help improve control on dirty roads or farm tracks.

Tread blocks on MTB tyres deform as they meet the contact surface. The energy used for this is partly converted into heat. Another part is stored and converted into the tread block's sliding movement when it leaves the contact surface, which contributes to the tyre's wear.

If a tyre with a deep tread is used on asphalt, this may make an unpleasant noise. If a pedelec with an MTB tyre is mainly ridden on the road, it is thus best to change the tyre for a pair of tyres with as little tread as possible to reduce wear and save energy. In such a case, the specialist dealer needs to replace the tyre with a new one with a shallow tread.

Bead core

Tyre carcasses are wrapped around bead cores. Wrapping the carcass around both sides creates three carcass plies.

To ensure that tyres do not slip when inflated on the rim and have an effective grip, the bead cores are stabilised in two different ways:

Figure 12: Steel bead core (1) and Kevlar bead core (2)

- with a steel wire. These tyres are called *clinchers*.
- with aramid fibres (Kevlar®). These tyres are called folding tyres. Folding tyres are about 50-90 g lighter than clinchers. It can also be folded into a smaller pack size.

Puncture protection belt (optional)

There may be a puncture protection belt between the carcass and the tread.

Figure 13: Effect of puncture protection belt

Each tyre manufacturer has its own puncture protection classes, which cannot be directly compared with one another.

3.4.4.3 Rim

The rim is the metal profile on a wheel which holds the tyre, tube and rim band together. The rim is joined to the hub with spokes.

In rim brakes, the outer surface of the rim is used to brake.

3.4.4.4 Tube

Each tube-type tyre has a valve. Air is pumped into the tube via the valve. There is a valve cap on each valve.
The screw-on valve cap keeps out dust and dirt.

The pedelec has either a:

- Dunlop valve
- Presta valve
- Schrader valve

Dunlop valve

The Dunlop valve, also known as a Blitz valve or Woods valve, is the most widely used valve. The valve insert can be replaced easily and air can be let out very quickly.

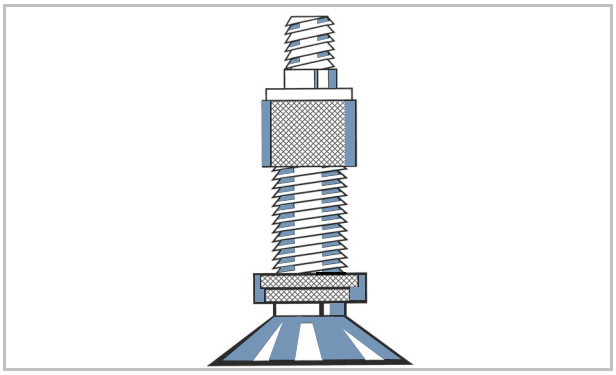

Figure 14: Dunlop valve

Presta valve

The Presta valve, also known as the Sclaverand valve or French valve, is the narrowest variant of all valves. The Presta valve requires a smaller hole in the rim, which is why it is especially suitable for the narrow rims on racing bicycles. It is about 4 to 5 g lighter than a Dunlop or Schrader valve.

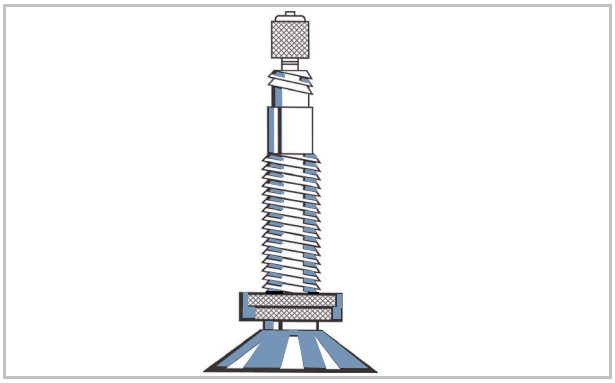

Figure 15: Presta valve

Schrader valve

Tyres with a Schrader valve can be inflated at filling stations. Older, simple bicycle air pumps are unsuitable for Schrader valves.

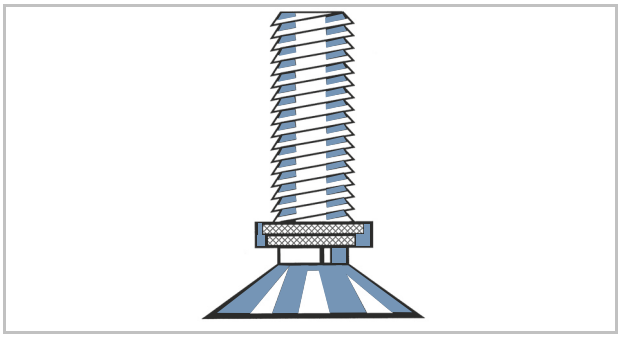

Figure 16: Schrader valve

3.4.4.5 Spoke

A spoke is a rod that connects the hub to the rim. The bent end of the spoke which is hooked into the hub is called the spoke head. A screw thread between 10 mm and 15 mm is attached to the other end of the spoke.

3.4.4.6 Spoke nipples

Spoke nipples are screw elements with an internal thread which fits onto the spoke thread. Fitted spokes are tensioned by tightening the spoke nipples. This straightens the wheel uniformly.

3.4.4.7 Hub

The hub is located in the centre of the wheel. The hub is connected to the rim and tyre with the spokes. An axle runs through the hub, connecting the hub with the fork at the front and with the frame at the rear.

The hub's main task is to transfer the pedelec's force of weight to the tyres. Special hubs on the rear wheel perform additional functions. There is a distinction between five types of hub:

- Hubs without additional features
- Brake hub (see back-pedal brake)
- Gear hub, also known as a hub gear
- Generator hub (for bicycles only)
- Motor hubs (for front- and rear-driven pedelecs only).

Hub without additional features

The front wheel hubs on pedelecs with central or rear motors are normally hubs without additional features.

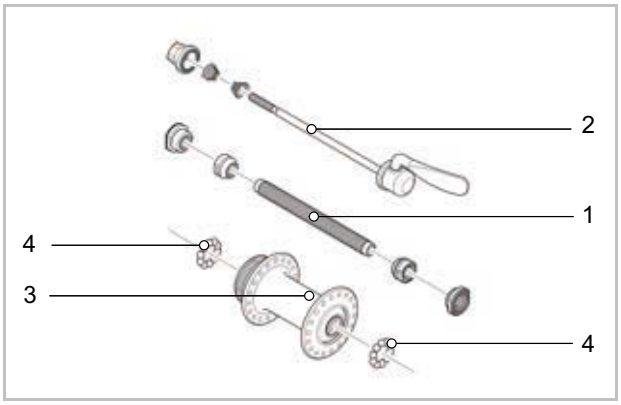

Figure 17: Example of front wheel hub: SHIMANO

1 Hub axle
2 Quick release
3 Hub body
4 Ball bearings

3.4.5 Brake

A pedelec's brake system is primarily operated using the brake lever on the handlebars.

- If the left brake lever is pulled, the brake on the front wheel is applied.
- If the right brake lever is pulled, the brake on the rear wheel is applied.

The brakes are used to regulate speed and make an emergency stop. Applying the brakes will bring the pedelec to a safe, rapid halt in an emergency.

The brake is applied using the brake lever either

- with the brake lever and brake cable (mechanical brake) or
- with the brake lever and hydraulic brake cable (hydraulic brake).

3.4.5.1 Mechanical brake

The brake lever is connected to the brake via a wire inside the shift cable (also known as a Bowden cable).

Figure 18: Structure of a Bowden cable

3.4.5.2 Hydraulic brake

The brake fluid is contained in a closed tube system. If the brake lever is pulled, the brake fluid transfers pressure to the brake on the wheel.

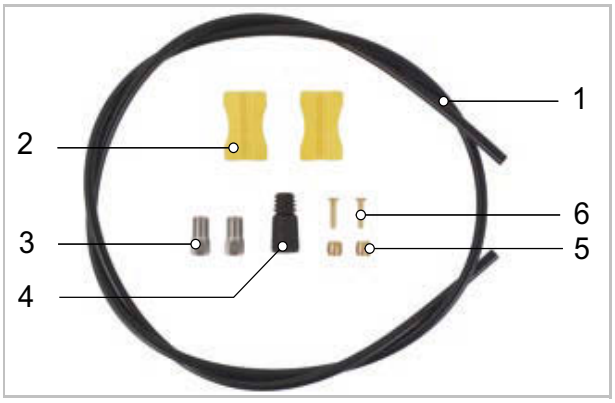

Figure 19: Components of a brake cable

1	Brake cable
2	Cable clip
3	Union nut
4	Cover cap
5	Knob
6	Insert pin

3.4.5.3 Disc brake

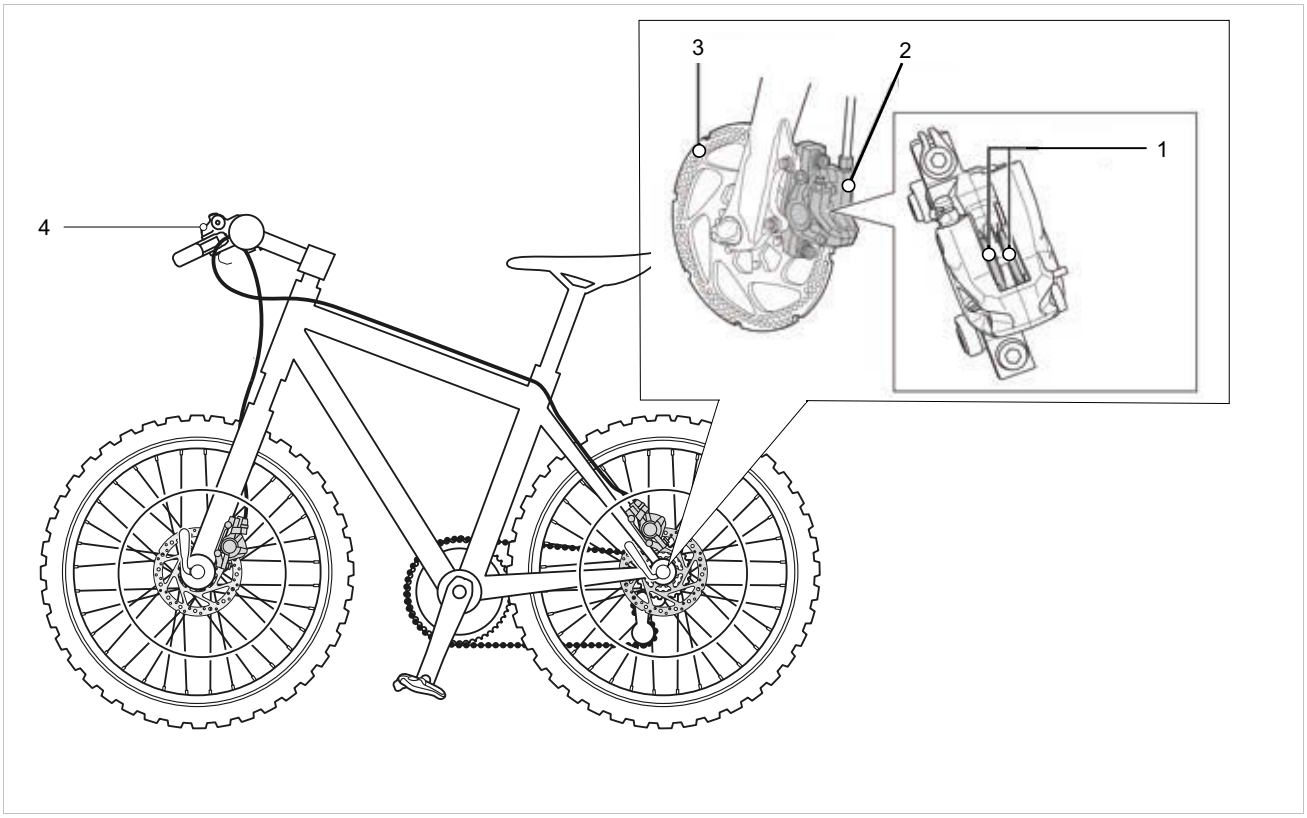

Figure 20: Brake system with disc brake – example

1 Brake lining
2 Brake adapter
3 Brake disc
4 Brake lever

On a pedelec with a disc brake, the brake disc is permanently screwed to the hub.

You increase brake pressure by pulling the brake lever. The brake fluid is used to transfer pressure through the brake cables to the cylinders in the brake calliper.

The braking force is boosted by a speed reduction and applied to the brake linings. These apply the brake disc mechanically. If the brake lever is pulled, the brake linings are pressed against the brake disc and the wheel movement is decelerated until it comes to a stop.

3.4.5.4 Back-pedal brake

Figure 21: Brake system with a back-pedal brake – example

1 Rear wheel rim brake
2 Handlebars with brake lever
3 Front wheel rim brake
4 Pedal
5 Back-pedal brake

The back-pedal brake is an extra brake. The back-pedal brake stops the rear wheel from moving by pushing the pedals in the opposite direction to the direction of travel.

3.4.6 Saddle

The purpose of the saddle is to absorb body weight, provide support and allow different riding positions. The shape of the saddle thus depends on the intended use of the pedelec and the rider's physique and posture.

When riding, the rider's body weight is distributed between the pedals, the saddle and the handlebars. When the rider is an upright position, the relatively small saddle area bears about 75% of their body weight.

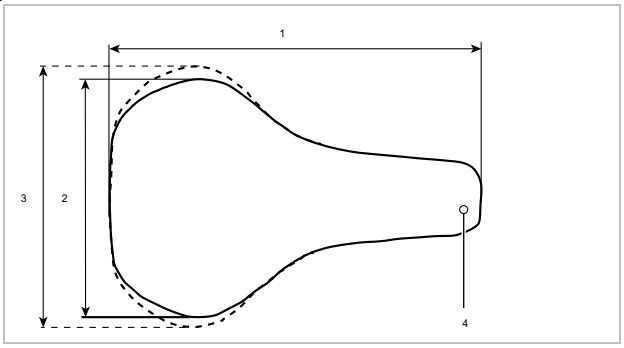

Figure 22: Saddle dimensions

1 Saddle length
2 Saddle width (narrow version)
3 Saddle width (wide version)
4 Saddle nose

The seat area is one of the most sensitive regions of the body. The saddle should allow the rider sit free of pain and fatigue. The saddle shape must suit each individual's anatomy. Solutions for sitting discomfort are listed in Section 10.1.

Saddles are provided in different sizes. The width of the pelvis and the gap between the sitting bones is crucial when selecting a saddle. Different saddle variants thus differ in their width.

You will find two methods to calculate the minimum saddle width in Section 7.3.11.3.

3.4.6.1 Ladies' saddle

The distance between the ischial tubercles and the pubic symphysis is on average a quarter less in women than in men. This is why painful pressure points can occur on men's saddles through the saddle nose since saddles that are too narrow or too soft press on the genitals or coccyx.

Figure 23: Female pelvis on saddles

For anatomical reasons, the pubic symphysis (front cartilage connection between the two halves of the pelvis) is, on average, a quarter lower than in the male pelvis. The angle between the pubic bones is wider.

The pelvis is more mobile in women than it is in men. Consequently, the pelvis often tilts forward more on the saddle. This causes high pressure in the genital area.

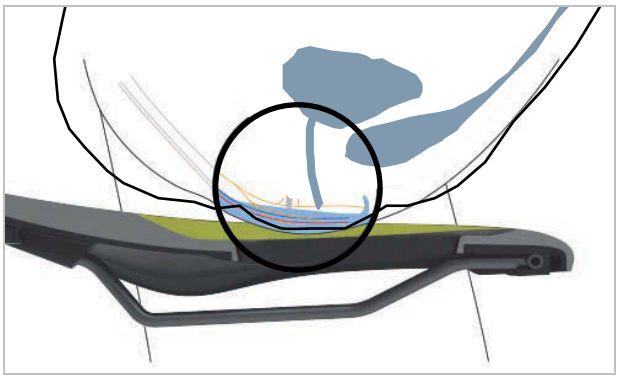

Figure 24: Pressure points on a saddle, female anatomy

3.4.6.2 Men's saddle

In contrast to the female anatomy, men's pubic bones are at a much steeper angle to one another. The pubic symphysis is much higher.

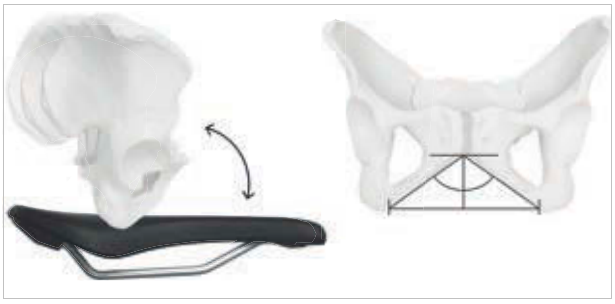

Figure 25: Male pelvis on saddles

The male pelvis is less flexible than women's. Men sit more upright on the saddle and put greater strain on the sitting bones. This means that the transition area

between the saddle rear and nose can be kept narrow (-Y-shape). This gives more space to pedal.

Numbness when riding a pedelec is often caused by high pressure in the sensitive perineal area. If the saddle is adjusted incorrectly, too narrow or too hard, the nose of the saddle presses directly onto the genitals. Blood circulation deteriorates. The genitals on the outside are seldom the cause of discomfort since they can move out of the way and are not compressed by bone structures.

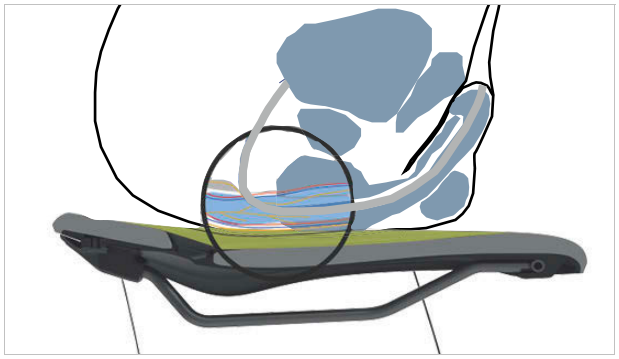

Figure 26: Pressure points on a saddle, male anatomy

3.4.7 Seat post

Seat posts are not only designed to fasten the saddle but also to adjust exactly to the optimum sitting position. The seat post can:

- adjust the seat height in the seat tube
- adjust the saddle horizontally with a clamping mechanism
- adjust the saddle angle by swivelling the entire saddle clamping mechanism.

Retractable seat posts feature a remote control on the handlebars, which can be used to lower the seat post at traffic lights, for example, and then raise it again.

3.4.7.1 Patented seat post

Patented seat posts have a rigid link between the saddle and the post. Patented seat posts which are angled more markedly towards the rear are offset seat posts. Offset seat posts provide a greater distance between the saddle and the handlebars.

In patented seat posts, the saddle is attached to the head with one or two seat clamp screws. It is recommended to lubricate the thread in these screws to ensure sufficient tension when tightening the screw.

Patented seat posts are fastened into the seat tube with either a quick release or a screwable clamp.

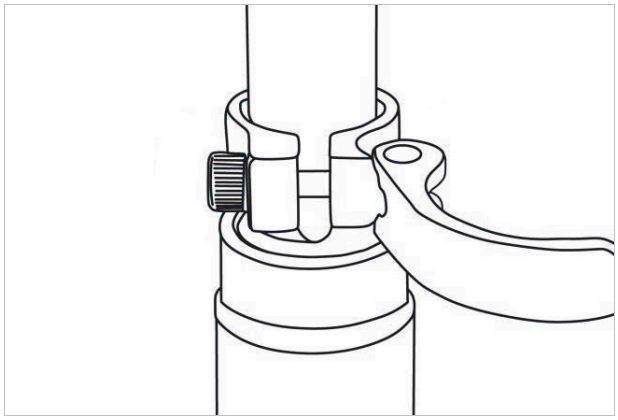

Figure 27: Example of a quick release

3.4.7.2 Suspension seat post

Suspension seat posts can reduce shock after one-time hard impacts, thus improving ride comfort significantly. However, suspension seat posts are not able to compensate for bumps in the road.

If the seat post is the only suspension element, the entire pedelec is a non-suspended mass. This has an unfavourable effect on loaded touring bikes or pedelecs with child trailers.

Suspension seat posts feature small, heavy-duty slide bearings, guides and articulated joints. If they are not lubricated on a regular basis, the sensitive response behaviour diminishes considerably, causing excessive wear.

3.4.8 Mechanical drive system

The pedelec is driven by muscle power, just like a bicycle.

The force which is applied by pedalling in the direction of travel drives the front chain wheel. The chain or belt transmits the force onto the rear chain wheel and then onto the rear wheel.

The pedelec is equipped with either a chain or belt drive.

3.4.8.1 Parts of a chain drive

Figure 28: Diagram of chain drive with derailleur gears

1 Front derailleur
2 Cassette/Cassette sprocket
3 Rear derailleur
4 Chain
5 Chain wheel

The chain drive is compatible with a

- Back-pedal brake,
- Hub gear
- Derailleur gears.

3.4.8.2 Parts of a belt drive

Figure 29: Diagram of a belt drive

1 Front belt sprocket
2 Rear belt sprocket
3 Belt

A belt drive is compatible with

- Back-pedal brake and
- Hub gear.

A belt drive is not compatible with derailleur gears.

3.4.9 Electric drive system

Component	Designation	Manual
Motor	BOSCH, Performance Line [BDU3360] (EB11.100.00A)	See Section 10.1.003
Motor	BOSCH, Performance Line CX/ Cargo [BDU3740](EB11.100.001)	See Section 10.1.002
Motor	BOSCH, Performance Line CX [BDU3840] (EB11.100.00E)	See Section 10.1.007, embargo until 30.09.2024
Motor	BOSCH, Performance Line CX [BDU3843] (EB11.100.01C)	See Section #0, embargo until 30.09.2024
Motor	BOSCH, Performance Line SX [BDU3144] (EB11.100.00V)	See Section 10.1.004
Motor	BROSE, MY24 [#] (#)	See Section #0
Motor	FIT, BAFANG H600 (501187)	#O
Motor	FIT, Brose Drive-P (501376)	#O
Motor	FIT, Brose S-MAG (501366)	#O
Motor	FIT, Brose S-MAG FIT (500956)	See Section 10.01.009 , CE06.5.00013
Motor	FIT, Pinion E1.12 (501070)	See Section 10.1.010, CE06.5.00004

Component	Designation	Manual
Motor	FIT, Pinion E1.12 SPEED PEDELEC (501109)	See Section 10.1.010, CE06.5.00004
Motor	FIT, Pinion E1.9 (501069)	See Section 10.1.010, CE06.5.00004
Motor	FIT/MAXON, #	See Section #0
On-board computer	BOSCH, LED Remote [BRC3600] (EB13.100.00E)	See Section 10.2.002
On-board computer	BOSCH, Purion 200 [BRC 3800] (EB13.200.03V)	See Section 10.2.003
On-board computer	BOSCH, SystemController [#] (EB13.200.03B)	#O
On-board computer	BOSCH, SystemController [BRC3100] (EB13.100.000)	See Section 10.2.004
On-board computer	FIT, LCD Remote (RD2.1) (501263)	See Section 10.2.016, CE06.5.00015
On-board computer	FIT, LCD Remote (RD2.2) (#501264)	See Section 10.2.016, CE06.5.00015
On-board computer	FIT, Master Node Basic (501301)	See Section 10.02.018
On-board computer	FIT, Remote Basic (501262)	See Section 10.2.005
Display	BOSCH, Intuvia 100 [BHU3200] (EB13.100.00F)	See Section 10.3.001
Display	BOSCH, Kiox 300 [BHU3600] (EB13.100.003)	See Section 10.3.002
Display	BOSCH, Kiox 500 [BHU3700] (EB13.100.004)	See Section 10.3.002
Display	FIT, Compact (500085)	See Section 10.3.003, CE06.5.00004
Control panel	BOSCH, Mini-Remote [BRC3300] (EB13.100.001)	See Section 10.4.001
Battery	BOSCH, CompactTube 400 Wh (BBP3242) (EB12.100.020)	See Section 10.5.002
Battery	BOSCH, PowerPack Frame 545 [BBP3550] (EB12.100.02J)	See Section 10.5.008
Battery	FIT, Supertube 275 (501167)	#O, 275 Wh
Battery	FIT, Supertube 400 (#)	#O, 400 Wh
Battery	FIT, Supertube 550 (501168)	#O, 550 Wh
Battery	SHIMANO, BT-DN320	#O
Charger	BOSCH, 2A Charger [BPC3200] (EB12.110.016)	Charging current (max.): 2 A, 220-240 V; see Section 10.6.001

Component	Designation	Manual
Charger	BOSCH, 4A charger [BPC3400] (EB12.110.001)	Charging current (max.): 4 A, 220-240 V; see Section 10.6.001
Charger	FIT, FIT Standard Charger (500950)	See Section 10.6.004, CE06.5.00002
Charger	FIT, FIT Standard Charger (500951)	See Section 10.6.003, CE06.5.00002
Charger	SHIMANO, EC-DN100	#O
Charger	SRAM AXS	#O

3.4.10 Seat post

Seat posts are not only designed to fasten the saddle but also to adjust exactly to the optimum sitting position. The seat post can:

- adjust the seat height in the seat tube
- adjust the saddle horizontally with a clamping mechanism
- adjust the saddle angle by swivelling the entire saddle clamping mechanism.

Retractable seat posts feature a remote control on the handlebars, which can be used to lower the seat post at traffic lights, for example, and then raise it again.

3.4.10.1 Patented seat post

Figure 30: Example of ergotec patent seat post with either one or two seat clamp screws

Patented seat posts have a rigid link between the saddle and the post. Patented seat posts which are angled more markedly towards the rear are offset seat posts. Offset seat posts provide a greater distance between the saddle and the handlebars.

In patented seat posts, the saddle is attached to the head with one or two seat clamp screws. It is recommended to lubricate the thread in these screws to ensure sufficient tension when tightening the screw.

Patented seat posts are fastened into the seat tube with either a quick release or a screwable clamp.

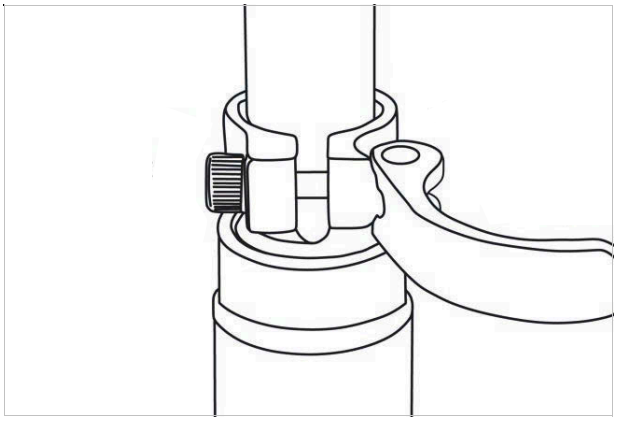

Figure 31: Example of a quick release

3.4.10.2 Suspension seat post

Suspension seat posts can reduce shock after one-time hard impacts, thus improving ride comfort significantly. However, suspension seat posts are not able to compensate for bumps in the road.

If the seat post is the only suspension element, the entire pedelec is a non-suspended mass. This has an unfavourable effect on loaded touring bikes or pedelecs with child trailers.

Suspension seat posts feature small, heavy-duty slide bearings, guides and articulated joints. If they are not lubricated on a regular basis, the sensitive response behaviour diminishes considerably, causing excessive wear.

The pre-tensioning in non-damped suspension seat posts must be adjusted in such a way that the suspension seat post does not deflect with just body weight. This prevents the suspension seat post from deflecting and bobbing intermittently at higher pedalling frequencies or if the rider pedals irregularly.

The spring stiffness can be set lower with damped suspension seat posts, thus making use of the negative deflection.

3.4.11 Mechanical drive system

The pedelec is driven by muscle power, just like a bicycle.

The force which is applied by pedalling in the direction of travel drives the front chain wheel. The chain or belt transmits the force onto the rear chain wheel and then onto the rear wheel.

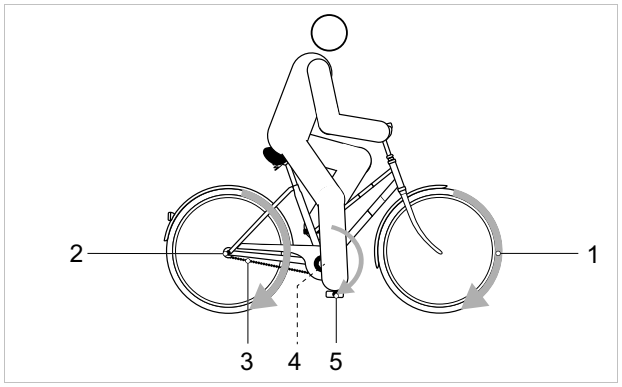

Figure 32: Diagram of mechanical drive system

1 Direction of travel
2 Chain or belt
3 Rear chainring or belt sprocket
4 Front chainring or belt sprocket
5 Pedal

The pedelec is equipped with either a chain or belt drive.

3.4.11.1 Parts of a chain drive

Figure 33: Diagram of chain drive with derailleur gears

1 Front derailleur
2 Cassette/Cassette sprocket
3 Rear derailleur
4 Chain
5 Chain wheel

The chain drive is compatible with a

- Back-pedal brake,
- Hub gear
- Derailleur gears.

3.4.11.2 Parts of a belt drive

Figure 34: Diagram of a belt drive

1 Front belt sprocket
2 Rear belt sprocket
3 Belt

A belt drive is compatible with

- Back-pedal brake and
- Hub gear.

A belt drive is not compatible with derailleur gears.

3.4.11.3 Folding pedal

Only feet can be used on the folding pedal. The rider applies physical force to the mechanical drive system with their feet, driving the vehicle forward.

The folding pedal can be folded in. As it is folded up at the side, the folding pedal is nearer to the crank. The vehicle can be carried more easily with the pedals folded away and takes up less space when parked or placed in storage.

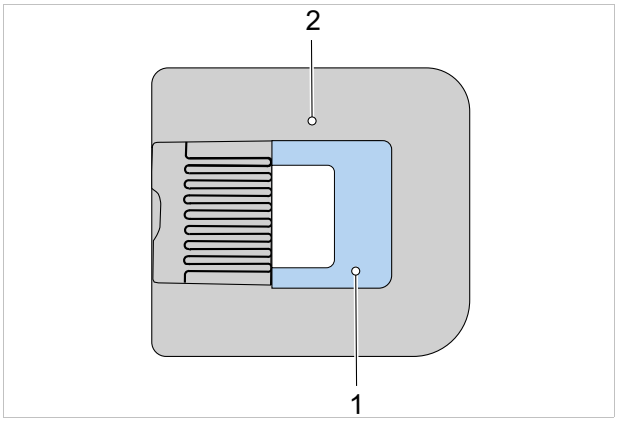

Figure 35: i:SY folding pedal with pedal fold latch (1)

The folding pedal has an unlocking system featuring a pedal folding latch (1) and a concealed internal spring for easy folding.

The left pedal has a left-handed thread and the right crank has a right-handed thread to prevent them from coming loose. The folding pedal features a standard 9/16" × 20 thread.

3.4.11.4 System Controller control panel

BOSCH System Controller control panel is in the upper tube.

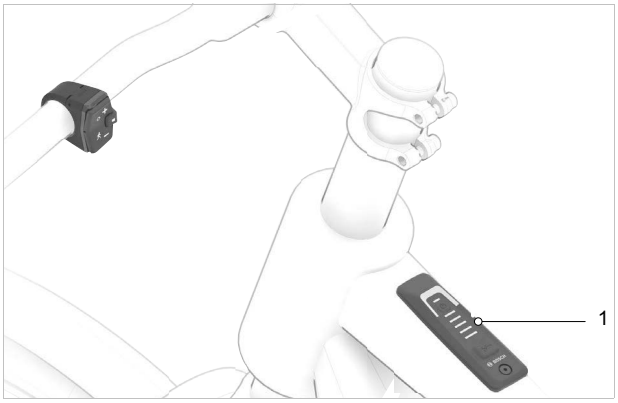

Figure 36: Position of BOSCH System Controller (1) on-board computer

The BOSCH System Controller controls the system and all indicators on the display screen together with the BOSCH Mini Remote control panel. The BOSCH System Controller features two buttons and two indicators. It can be linked to the eBike Flow app via Bluetooth®.

The control panel battery is powered and charged if a sufficiently charged pedelec battery is inserted into the pedelec and the drive system is switched on.

3.4.11.5 Mini Remote control panel

The Mini Remote control panel is located on the handlebars.

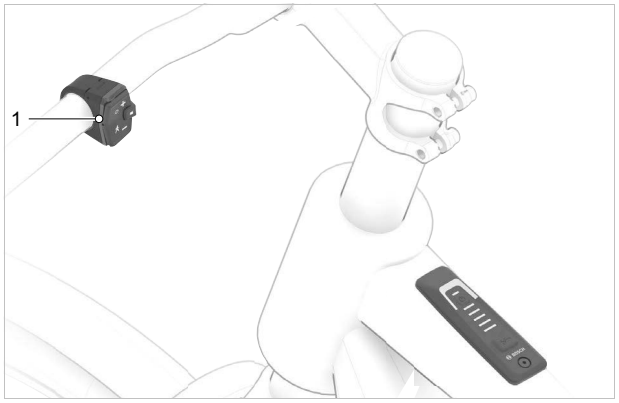

Figure 37: Position of BOSCH Mini Remote (1) control panel

The electric drive system is controlled on the Mini Remote control panel.

The Mini Remote control panel is powered by a CR1620 button cell.

3.4.11.6 Kiox 300 and Kiox 500 displays

The display shows the main drive system functions and the ride data.

Figure 38: BOSCH Kiox 300 and Kiox 500 displays

The display switches off automatically if it is removed from its mount.

3.4.11.7 Lighting

Lighting includes:

- The front light (also known as the headlight or front lamp)
- The rear light (also known as the rear lamp)

The headlight and the rear light are also on whenever the riding light is activated.

3.4.11.8 FUXON front light, FS-100 EB main beam with main beam switch

The FUXON front light, FS-100 EB main beam features a reflector and a main beam switch.

Figure 39: Parts of FUXON, FS-100 EB main beam

1 Headlight
2 Main beam switch
3 Reflector

In normal mode, the headlight illuminates the road ahead with around 100 lux. The LED in the main beam switch lights up green in normal mode.

You can turn on the main beam by pressing the main beam switch briefly. Press on it again briefly to turn the headlight back to normal mode.
The LED in the main beam switch lights up blue in main beam mode.

The provisions in road traffic regulations apply to main beam operation.

- The main beam must not be activated in built-up areas or on roads with consistently adequate lighting at any time.
- The main beam must not be used the moment it may dazzle other road users.

3.4.12 Handlebars with BOSCH System Controller with optional Mini Remote control panel

Figure 40: Detailed view of handlebars with BOSCH System Controller on-board computer and Mini Remote control panel – example

1	Lockout	6	Front wheel handbrake
2	Shifter	7	Handle
3	handle	8	Seat post remote control
4	Rear wheel handbrake	9	Air valve (suspension fork)
5	Control panel	10	On-board computer

3.4.12.1 BOSCH System Controller control panel

The BOSCH System Controller on the top tube is a control panel. It controls the system with two buttons and has three indicators.

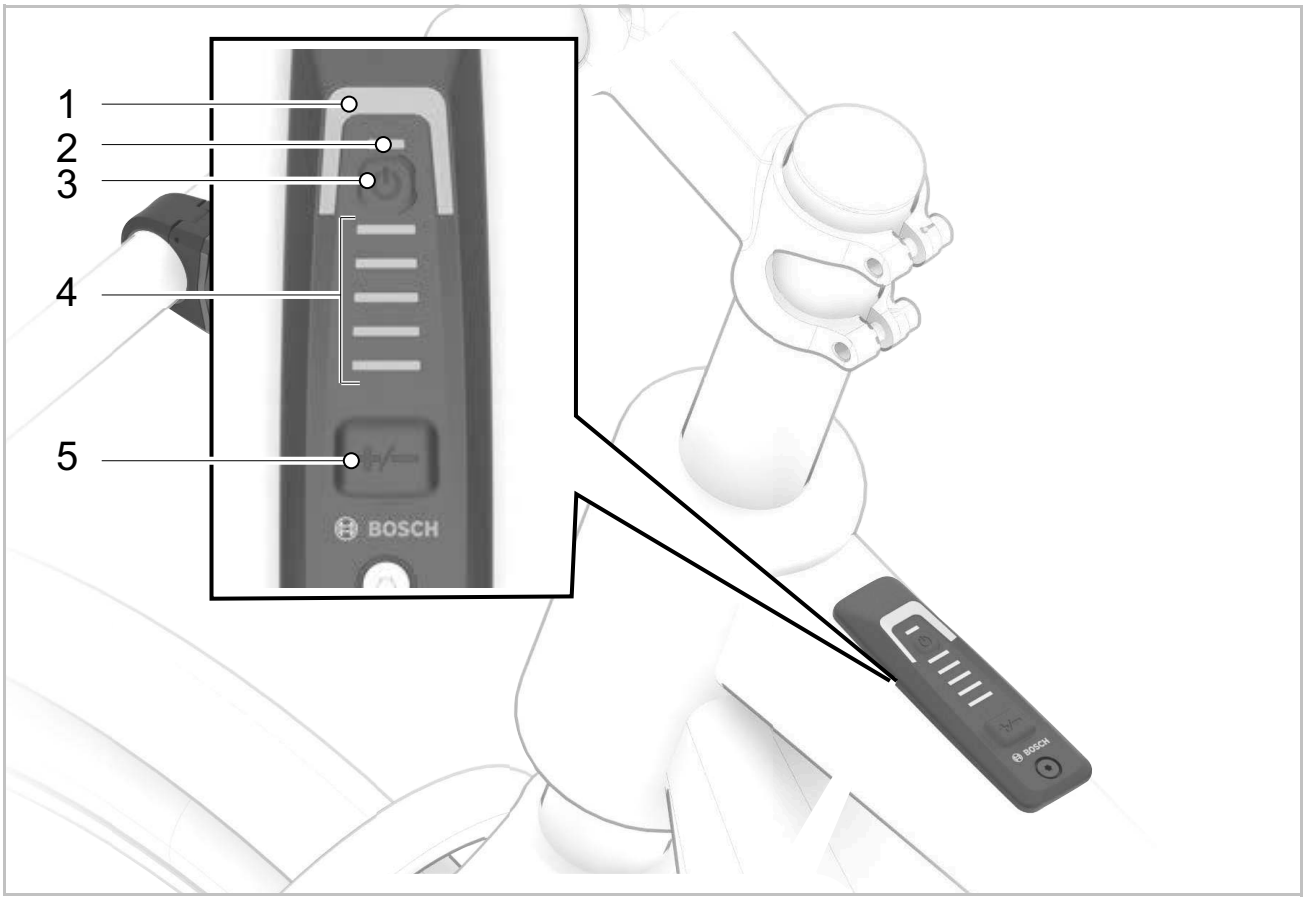

Figure 41: Overview of the System Controller control panel

1		Level of assistance indicator
2		ABS indicator (optional)/ambient light sensor
3	⏻	On-off button (control panel)
4		Battery Level indicator (control panel)
5	+ / -	Mode button

Level of assistance indicator

The higher the selected level of assistance, the more the drive system assists with pedalling. The BOSCH System Controller control panel or BOSCH Mini Remote control unit is used to configure how much the electric drive assists with pedalling.

Level of assistance	Use
OFF	When the drive system is switched on, the motor assistance is switched off. Use the pedelec like a normal pedelec by simply pedalling
ECO	Limited assistance with maximum efficiency for maximum range
TOUR	Constant assistance, for long-range tours
TOUR+	Dynamic support for sports cycling and riding in the countryside
eMTB/SPORT	Powerful assistance, for sporty start-up, optimal assistance on all types of terrain
TURBO	Maximum assistance up to high pedalling frequencies, for sport riding
AUTO	Assistance is adapted to the ride situation dynamically
RACEC	Maximum assistance on eMTB race circuit; highly direct response behaviour and maximum extended boost for high power in competitions
CARGO	Uniform, powerful assistance to transport heavy loads safely

Table 13: Overview of levels of assistance

The level of assistance is displayed by different colours on the level of assistance indicator.

Use	Colour
Maximum level of assistance	Red
Medium level of assistance	Purple
Low level of assistance	blue
Lowest level of assistance	Green
Assistance off	Black (LEDs are off)

ABS indicator (optional)/light sensor

The ABS indicator lights up on pedelecs with an ABS system when they start up.

The ABS will switch off if the pedelec reaches a speed of 6 km/h.

If there is a fault, the ABS indicator lights up together with the indicator showing the selected level of assistance, which will flash orange.

Press the **select button** to acknowledge the fault and the flashing indicator showing the selected level of assistance will go out. The ABS indicator remains lit to indicate that the ABS system is not in operation.

The ambient light sensor will adjust the brightness of the indicators on the System Controller. Keep ambient light sensor clear at all times.

Battery Level indicator (control panel)

The battery level indicator (control panel) shows the battery charge level. You can also see the battery charge level on the LEDs on the battery itself.

Each blue bar on the indicator signals 20% capacity and each white bar 10% capacity. The top bar indicates maximum capacity.
The indicator will turn orange when it is below 30% and red when below 10%.
When the indicator flashes red at 0%, this means that motor assistance is no longer possible; however, there is reserve capacity for lighting.

Bars	Capacity
5	91 … 100%
4 × blue + 1× white	81 … 90%
4 × blue	71 … 80%
3 × blue + 1× white	61 … 70%
3 × blue	51 … 60%
2 × blue + 1× white	41 … 50%
2 × blue	31 … 40%
2 × orange	21 … 30%
1 × orange	11 … 20%
1 × red	Reserve … 10%
1 x red, flashing	Flat ... reserve

The uppermost bar on the battery level indicator will flash when the battery is charging.

3.4.12.2 BOSCH Kiox 300 and Kiox 500 displays

The display is controlled using the control panel.

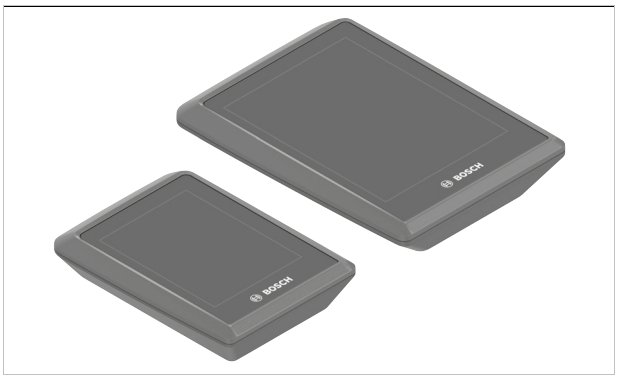

Figure 42: BOSCH Kiox 300 and Kiox 500 displays

The following screens are shown on the display screen:

- START SCREEN; see Section 3.4.8.1
- STATUS SCREEN; see Section 3.4.12.4
- SETTINGS, see Section 3.4.8.5

3.4.12.3 START SCREEN

If no other page was selected before the last time display was switched off, the START SCREEN is displayed.

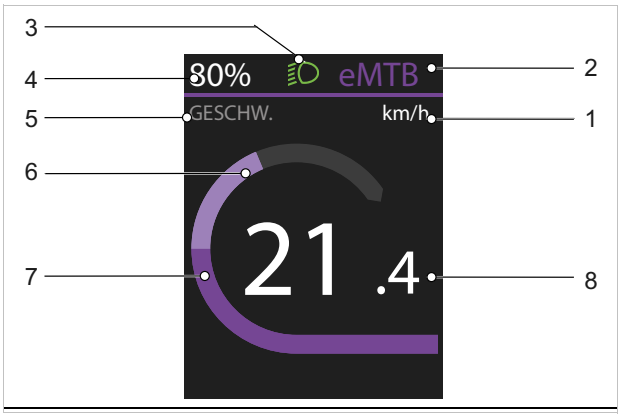

Figure 43: Overview of start screen, screen 1

1 Unit of speed
2 Selected level of assistance indicator
3 Riding light symbol
4 Battery level indicator (display screen)
5 Title screen
6 Own power indicator
7 Motor power indicator
8 Speed indicator

Indicators 2 to 4 form the status bar and are displayed on every screen.

You open the second START SCREEN by pressing the **select button**.

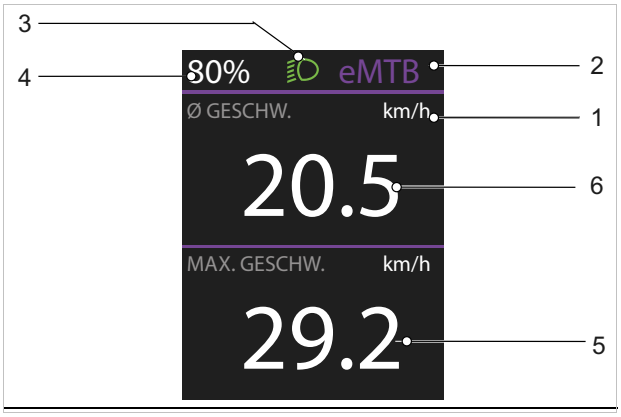

Figure 44: Overview of start screen, screen 2

1 Unit of speed
2 Selected level of assistance indicator
3 Riding light symbol
4 Battery level indicator (display screen)
5 Maximum speed indicator
6 Average speed indicator

1. Unit of speed

The unit of speed is displayed either in km/h or mph.

2. Selected level of assistance indicator

The higher the selected level of assistance, the more the drive system assists with pedalling.

eMTB mode is available for Performance Line CX drives. In eMTB mode, the assistance factor and the torque are dynamically adjusted depending on the pedalling force applied to the pedals.

Level of assistance	Use
OFF	When the drive system is switched on, the motor assistance is switched off. The pedelec can be used like a normal bicycle by simply pedalling.
ECO	Limited assistance with maximum efficiency for maximum range
TOUR	Constant assistance, for long-range tours

Table 14: Overview of levels of assistance

Level of assistance	Use
eMTB/SPORT	Powerful assistance, for sporty start-up, optimal assistance on all types of terrain
TURBO	Maximum assistance up to high pedalling frequencies, for sport riding

Table 14: Overview of levels of assistance

3. Riding light symbol

The riding light symbol is shown when the riding light is on.

4. Battery level indicator (display screen)

If the on-board computer is removed from its mount, the last battery level message is saved. The battery level indicator (display screen) can be viewed on the STATUS SCREEN and in the status bar.

5. Title screen

The title screen indicates the page name and the displayed function.

6. Own power indicator

The power that is currently being applied to the pedals is displayed as a semi-circle.

7. Motor power indicator

The motor power used is displayed as a bar. The maximum motor power depends on the selected level for assistance.

10. Speed indicator

The speed is displayed either in km/h or mph.

3.4.12.4 STATUS SCREEN

You open the STATUS SCREEN by pressing the **<- button** on the start screen. You can open the settings on this screen.

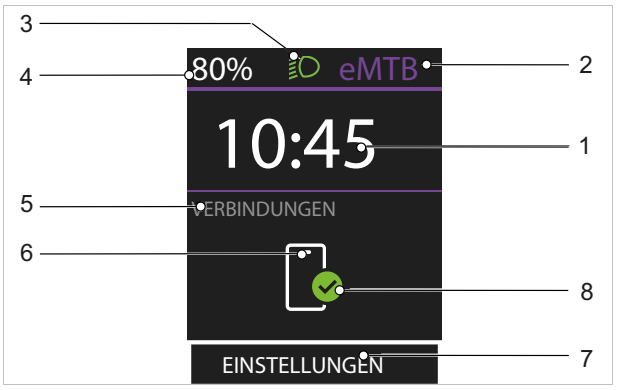

Figure 45: Overview of STATUS SCREEN

1 Clock indicator
2 Selected level of assistance indicator
3 Riding light symbol
4 Battery level indicator (display screen)
5 Connections indicator
6 Symbol showing connection to smartphone
7 Settings
8 Connection status

3.4.12.5 TRIP SCREEN

You open the TRIP SCREEN by pressing the **>- button** on the start screen.

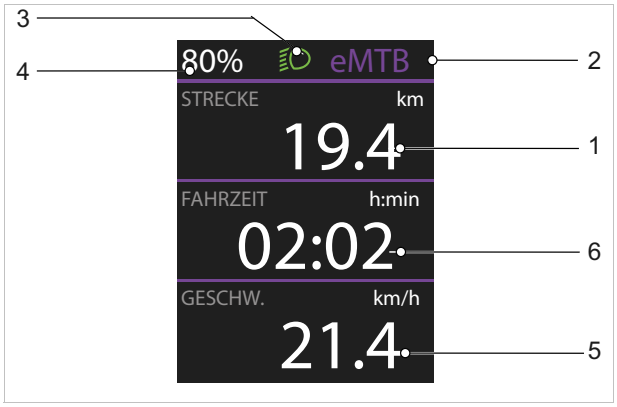

Figure 46: Overview of TRIP SCREEN, screen 1

1 Trip distance indicator
2 Selected level of assistance indicator
3 Riding light symbol
4 Battery level indicator (display screen)
5 Speed indicator
6 Trip time indicator

You open the second TRIP SCREEN by pressing the **select button**.

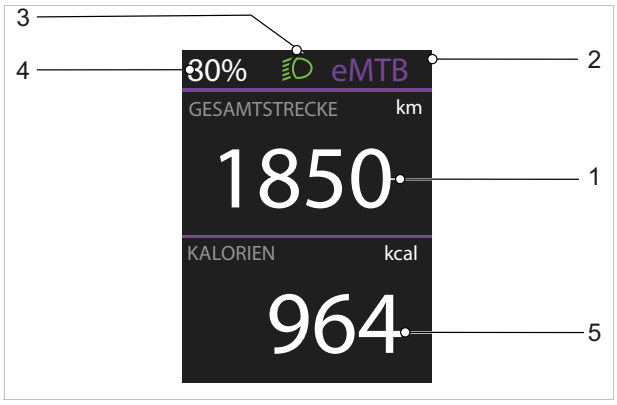

Figure 47: Overview of TRIP SCREEN, screen 2

1 Total distance screen
2 Selected level of assistance indicator
3 Riding light symbol
4 Battery level indicator (display screen)
5 Energy consumption indicator

3.4.12.6 RANGE SCREEN

You open the RANGE SCREEN by pressing the **>- button** on the START SCREEN.

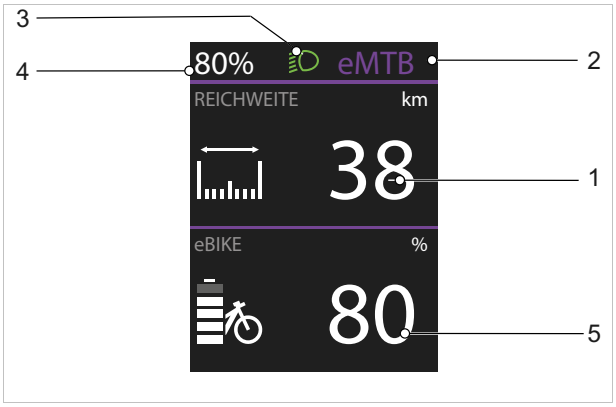

Figure 48: Overview of RANGE SCREEN, screen 1

1 Range indicator
2 Selected level of assistance indicator
3 Riding light symbol
4 Battery level indicator (display screen)
5 Battery level indicator 2 (display screen)

You open the second RANGE SCREEN by pressing the **select button**.

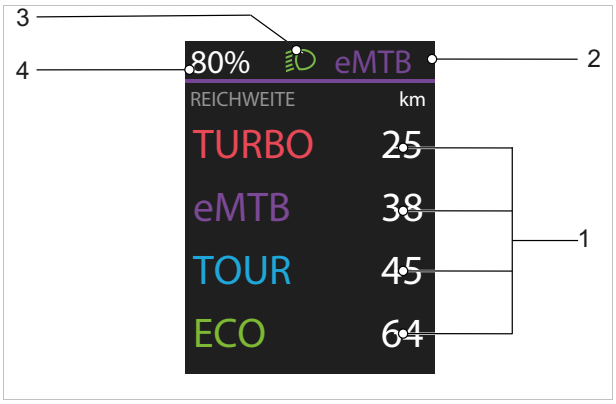

Figure 49: Overview of RANGE SCREEN, screen 2

1 Indicator of range in relation to the level of assistance
Level of assistance
2 Selected level of assistance indicator
3 Riding light symbol
4 Battery level indicator (display screen)

3.4.12.7 FITNESS SCREEN

You open the Fitness screen by pressing the **>- button** on the start screen.

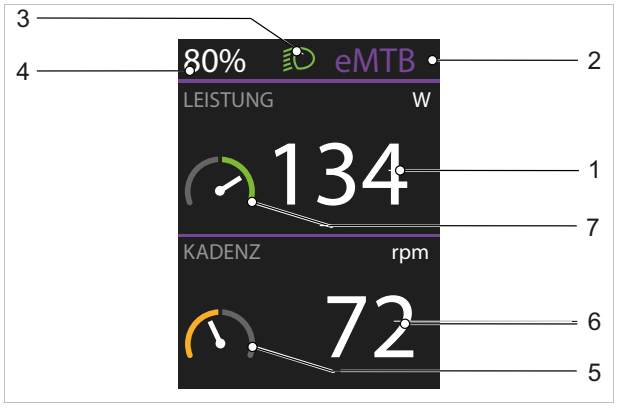

Figure 50: Overview of FITNESS SCREEN, screen 1

1 Own power indicator
2 Selected level of assistance indicator
3 Riding light symbol
4 Battery level indicator (display screen)
5 Destination indicator (below average)
6 Pedalling frequency indicator
7 Destination indicator (below average)

You open the second FITNESS SCREEN by pressing the **select button**.

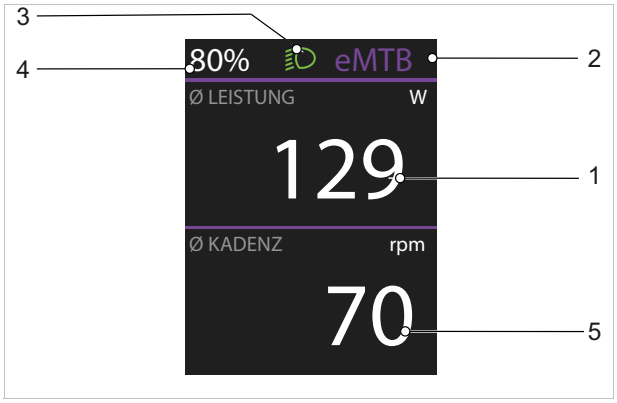

Figure 51: Overview of FITNESS SCREEN, screen 2

1 Indicator for Average Power in watts
2 Selected level of assistance indicator
3 Riding light symbol
4 Battery level indicator (display screen)
5 Indicator for Average Cadence in revolutions per minute

3.4.12.8 ABS-SIDE

Only applies to pedelecs with this equipment

You open the ABS screen by pressing the **>- button** on the start screen.

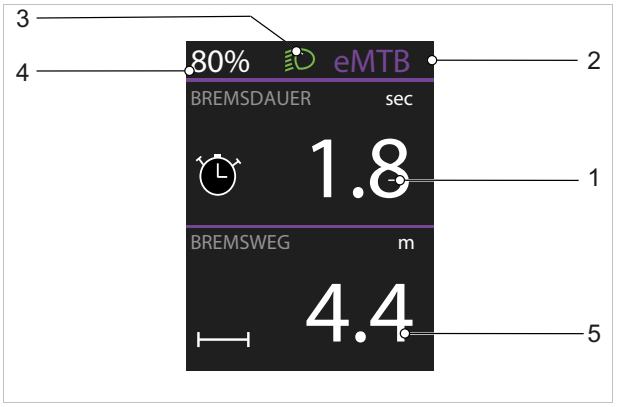

Figure 52: Overview of ABS SCREEN

1 Braking Time indicator
2 Selected level of assistance indicator
3 Riding light symbol
4 Battery level indicator (display screen)
5 Braking Distance indicator

3.4.12.9 SETTINGS

All system and service-relevant values can be read and changed in the settings. The settings menu structure is customised and may change when components or services are added.

Menu	Sub-menu
My eBike	
	→ <Range reset>
	→ <Auto trip reset>
	→ <Wheel circum.>
	→ <Service>
	→ <Components>
My Kiox	
	→ <Status bar>
	→ <Language>
	→ <Units>
	→ <Time>
	→ <Time Format>
	→ <Brightness>
	→ <Settings reset>
Information	
	→ <Contact>
	→ <Certificates>◦

Table 15: Kiox 300 basic menu and sub-menu structure

3.4.13 Handbrake

There is a handbrake on the left and right of the handlebars.

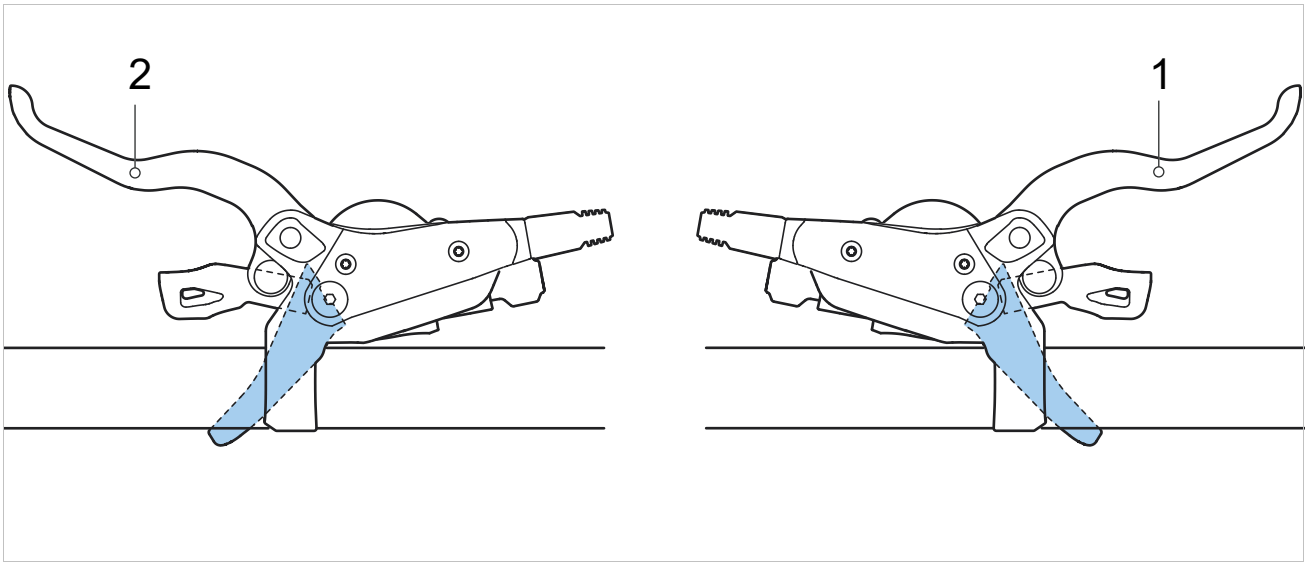

Figure 53: Rear wheel (1) and front wheel (2) brake levers – SHIMANO brake used as an example

The left handbrake (2) controls the front wheel brake.

The right handbrake (1) controls the rear wheel brake.

3.4.14 Gear shift

3.4.14.1 SHIMANO SL-T6000 derailleur gears

Only applies to vehicles with this equipment

The gear shift unit is on the left of the handlebars. The gear shift unit features two switches and an indicator.

Figure 54: SHIMANO SL-T6000 gear shift

1 Gear indicator
2 Lever A (gear shift)
3 Lever B (gear shift)

3.4.14.2 SHIMANO NEXUS SL-C7000-5 twist grip shifter

Only applies to vehicles with this equipment

SHIMANO hub gears feature a NEXUS SL-C7000-5 twist grip shifter with an indicator on the right of the handlebars.

Figure 55: SHIMANO NEXUS SL-C7000-5 twist grip shifter

1 Twist grip shifter
2 Gear indicator

You change gears by turning the twist grip shifter.

The Gear indicator shows the selected gear.

3.4.15 Suspension and damping

Only applies to vehicles with this equipment

3.4.15.1 SR SUNTOUR air valve (air suspension) and sag setting wheel (steel fork)

Model	AIR EQ	AIR	COIL Adjustable	COIL
	Air valve (suspension fork) Dual air suspension system	Air valve (suspension fork) Standard air suspension system	Sag setting wheel Steel spring with adjustable pre-tensioning	Sag setting wheel
Suspension	Air suspension	Air suspension	Steel spring	Steel spring
Aion	x			
Axon	x	x		
CR85			x	
Durolux	x			
GVX		x		
M3010			x	x
Mobie34/25	x	x	x	
Mobie35	x			
MobieA32			x	
NCX32/NCX		x	x	
NEX			x	
NVX			x	
NRX		x	x	
NX1/TR-HSI				
Raidon	x	x		
Rux	x	x		
X1				
XCE			x	
XCM		x	x	
XCR		x	x	
XCT		x	x	
Zeron35	x		x	

3.4.15.2 SR SUNTOUR suspension lock

Model	LO	NLO	HLO
Suspension fork			
CR85	x		
Mobie34CGO	x		
MobieA32	x	x	
NCX32/NCX	x		x
NEX		x	x
NRX	x		
NVX		x	
NX1/TR-HSI	x		x
X1	x		
XCM	x	x	x
XCR	x		
XCT		x	x

x = featured O = featured in PCS piston

Explanation

NLO	Hydraulic lock with recoil
HLO	Hydraulic lock without recoil

3.4.15.3 SR SUNTOUR suspension lock with remote control

Model	RL
Suspension fork	
MobieA32	x
NCX32/NCX	x
NVX	x
NX1/TR-HSI	x
X1	x
XCR	x

x = featured O = featured in PCS piston

Explanation

RL	Lock with fixed recoil and remote control

3.4.16 Battery

3.4.16.1 Battery level indicator

Each battery has its own level indicator.

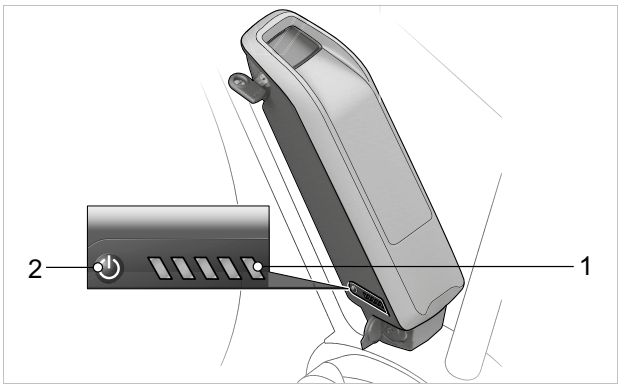

Figure 56: Position of battery level indicator on seat tube battery

1 On/off button (battery)
2 Battery level indicator (battery)

The five green LEDs on the battery level indicator show the charge level when the battery is switched on. Each LED represents 20% of battery capacity.

LED 1,2,3,4,5	Battery level
●●●●●	100…80%
●●●●○	79…60%
●●●○○	59…40%
●●○○○	39…20%
●○○○○	19…15%
○○○○○	5…0%

Figure 57: Battery level indicator

Symbols:

● LED on ○ LED off

All five LEDs will light up when the battery is fully charged. The charge level for the activated battery is also shown on the on-board computer.

If the battery level falls below 5%, all the LEDs on the operating status and battery level indicator will go out.
The battery level is still shown on the on-board computer.

4 Transporting and storing

4.1 Transportation

⚠CAUTION Crash caused by unintentional activation

There is a risk of injury if the drive system is activated unintentionally.

▶ Remove the battery.

4.1.1 Using the transport securing system

Applicable to pedelec disc brakes only

⚠CAUTION Oil leak if no transport securing device

The brake securing device prevents the brakes from being applied accidentally during transportation or shipment. Accidental braking could cause irreparable damage to the brake system or an oil leak, which would harm the environment.

▶ Never push the brake lever when the wheel has been dismounted.

▶ Always use the transport securing system between the brake linings when transporting or shipping.

⇨ Transport securing device is squeezed between the two linings and prevents undesired, sustained braking which can cause brake fluid to leak out.

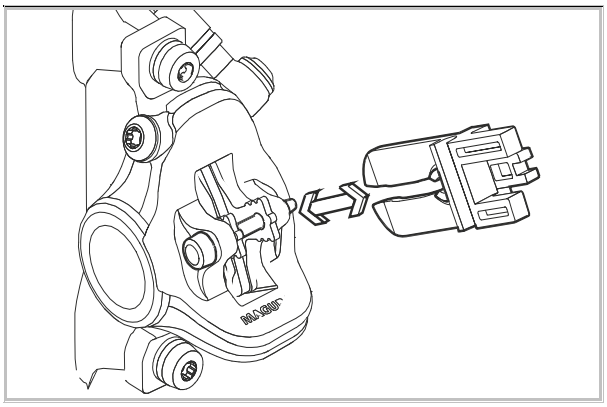

Figure 58: Fastening the transport securing device

4.1.2 Transporting the pedelec

4.1.2.1 By car

Bicycle rack systems which use the handlebars or frame to hold the pedelec in an upside-down position exert inadmissible forces on its components during transportation. This can cause the supporting parts to break.

▶ Remove battery (see Section 6.16.1.1 or 6.16.2.1).

▶ Remove all detachable components (display screen, bicycle pump, water bottle and similar) from the pedelec.

▶ Transport the battery in a clean, dry position where it is protected from direct sunlight.

▶ Never use bicycle rack systems which use the pedelec's handlebars or frame to hold the pedelec in an upside-down position. The specialist dealer will give a consultation on correct selection and safe use of a rack system.

▶ Take into account the weight of the ready-to-use pedelec when transporting it.

4.1.2.2 By train

Pedelecs can usually be transported in trains with a bicycle compartment.

✓ If you want to take your pedelec with you on the train, you should take into account that access to platforms are not always barrier-free. You should thus allow enough time to get on and off the train.

1 Buy a bicycle ticket for the pedelec.

2 Fasten the pedelec securely in the compartment.

3 Take a seat in the passenger carriage.

It is possible to take a pedelec on certain high-speed train routes. The battery must remain firmly mounted during the journey and must not be charged.

4.1.2.3 By local transport

You can normally take pedelecs on local public transport, e.g. by bus or suburban rail, if you purchase a bike ticket. There may be times when this is not permitted. Local transport companies can give you further information on carriage of bicycles.

4.1.2.4 By long-distance bus

Pedelecs can usually be taken on the long-distance bus for an extra charge, although places are limited. It is best to book early. However, not every bus line accepts pedelecs. You should check with the long-distance bus provider concerned before travelling.

4.1.2.5 On flights

It is forbidden to transport rechargeable batteries on passenger planes. Most airlines won't even carry pedelecs without batteries on passenger planes either.

It is a good idea to find out about pedelec leasing at your destination in advance if you wish to use a pedelec while on holiday. This way, you won't need to forgo pedelec riding fun during your holidays.

4.1.3 Shipping a pedelec

▶ When shipping the pedelec, we recommend that you have the specialist dealer place it in proper packaging.

4.1.4 Transporting the battery

Batteries are subject to hazardous goods regulations. Undamaged batteries may be transported by private persons in road traffic.

4.1.5 Shipping the battery

The battery is considered a hazardous good and only trained persons may pack and ship a battery. Contact specialist dealer.

4.2 Storing

▶ Always store pedelec, battery, on-board computer, display and charger separately.

Storage temperature	+10 … +40 °C
Humidity	30%…85%
Ideal storage temperature	+10 … +20 °C
Optimum air humidity	30%…60%

Table 16: Ambient conditions for storage

▶ Temperatures under -5 °C or over +40 °C and air humidity over 85% must generally be avoided.

▶ Store pedelec, on-board computer, battery and charger in a place which is

- dry
- clean
- protected from direct sunlight
- well-ventilated
- Never store in the open air.

4.2.1 Pedelec

Store pedelec in a garage or a dry basement.

4.2.2 On-board computer, display and charger

Store on-board computer, display and charger in a dry environment at room temperature.

4.2.3 Battery

- ▶ Storage at about 10 °C to 20 °C for a long battery life.
- ▶ Store batteries in rooms with smoke detectors. A protection box with an electrical connection is an optimal solution.
- ▶ Never store batteries near to inflammable or easily combustible objects.
- ▶ Never store batteries near sources of heat.

4.2.4 Break in operation

Notice Batteries discharge if they are not used. If the battery is stored for a longer period of time when empty, it can become damaged and its storage capacity can be greatly reduced.

- ▶ Store battery with at least 30% charge.
- ▶ Charge battery every six months.

Charge LED on the Remote or System Controller via the USB diagnostic interface for about an hour every three months.

Notice The battery may become damaged if it is connected permanently to the charger.

- ▶ Never connect the battery to the charger permanently.

- ▶ Remove the on-board computer and battery from their mount if the pedelec is not going to be used for up to four weeks.
- ▶ If the pedelec is removed from service for longer than four weeks, you need to prepare it for a break in operation.

4.2.4.1 Preparing for a break in operation

1. The pedelec needs to be cleaned with a damp cloth and preserved with wax spray. Never wax the friction surfaces of the brake.
2. Have the specialist dealer carry out maintenance and basic cleaning and apply preservative agent before longer periods without use.
3. Remove battery (see Section 6.16.1.1 or 6.16.2.1).
4. Charge battery between 30% and 60% so that two or three LEDs light up on the battery level indicator.

4.2.4.2 Initiating a break in operation

1. Store the pedelec, battery and charger in a dry, clean environment. We recommend storing them in uninhabited rooms with smoke alarms. Dry locations with an ambient temperature between 10 °C and 20 °C are ideal.
2. Check the battery level after 6 months. If only one LED on the battery level indicator lights up, recharge the battery to around 30%–60%.

5 Installation instructions

Only trained technical staff with additional training from the system manufacturer and are allowed to perform pedelec assembly and installation work.

WARNING Risk of eye injury

Problems may arise if components are set incorrectly. They may cause serious injuries to the face.

▶ Always wear safety glasses when assembling.

CAUTION Crash and crushing hazard caused by unintentional activation

There is a risk of injury if the electric drive system is activated unintentionally.

▶ Before fitting Remove the battery.

5.1 Required tools and materials

The following tools are required to assemble the pedelec:

- Assembly gloves
- Nitrile gloves.
- Protective goggles
- Training documents and the system manufacturer's technical accessories
- Printed copy of assembly report
- Pen
- Workshop towels
- Fitting stand (up to 30 kg load as)
- Lubricating grease
- Assembly paste
- Pump
- Knife
- Ring spanner: 8 mm, 9 mm, 10 mm, 13 mm, 14 mm and 15 mm
- Torque wrench: Working range 5-40 Nm
- Handlebars: TORX® bits: T50, T55 and T60
- Hex key: 2 mm, 2.5 mm, 3 mm, 4 mm, 5 mm, 6 mm and 8 mm
- Tork key T25
- Cross-recess screwdriver
- Slotted-head screwdriver

5.2 Unpacking

CAUTION Cut injuries due to protruding staples and sharp edges

There may be staples protruding when you open packaging. This can cause hand injuries.

▶ Wear assembly gloves at all times when unpacking.

The packaging material consists mainly of cardboard and plastic film.

▶ Dispose of the packaging in accordance with the regulatory requirements (see Section 9).

⇨ Pedelecs are fully assembled in the factory for test purposes and then dismantled for transportation. The pedelec is 95% to 98% pre-assembled.

Scope of delivery

☐	1 × pre-assembled pedelec
☐	1 × front wheel
☐	2 × pedals
☐	2 × quick releases (optional)
☐	1 × charger
☐	1 x technical documentation
☐	1 × battery (supplied separately from the pedelec)

5.3 Commissioning

Experience has shown that a pedelec which has not yet been sold is automatically handed to customers as soon as it appears ready to ride.

It makes sense to prepare each pedelec so that it is fully ready for use immediately after being assembled.

▶ Complete an assembly report to document quality assurance.

▶ Carry out all possible assembly work specified on the assembly report.

▶ Record all actions completed on the assembly report.

5.3.1 Checking the battery

The battery must be checked before it is charged for the first time.

▶ Press the **on-off button (battery)**.

⇨ The battery may be fully charged if at least one, but not all, of the LEDs on the **battery level indicator** lights up.

⇨ If none of the LEDs on the **battery level indicator** light up, the battery may be damaged.

▶ Contact the battery manufacturer.
Until its condition is determined, treat the battery as if it were faulty and store it accordingly (see Section 2.1.1).

5.3.2 Preparing the wheel

There is an arrow on the sides of the tyres with the inscription ROTATION to show the direction of rotation. The inscription says DRIVE on older tyres. The rotation direction arrow indicates the recommended direction of rotation. On road tyres, the direction of rotation is mainly for optical reasons.

Figure 59: Rotation direction arrow

The direction of rotation is much more important on off-road terrain because the tread creates an interlock with the ground. While the rear wheel needs to transmit the drive forces, the front wheel is responsible for transmitting braking and steering forces. Drive and braking forces have different directions of action. This is why some tyres are mounted on the front and rear wheels in opposite directions. On these tyres, there are two rotation direction arrows: The FRONT rotation direction arrow indicates the recommended direction of rotation for the front wheel.

- The REAR rotation direction arrow indicates the recommended direction of rotation for the rear wheel.

Figure 60: Rotation direction arrow on MTB tyres

▶ The rotation direction arrow must point in the direction of travel when the wheel is placed in the fork.

5.3.3 Adjusting the Sonic BOSCH BES3 frame

In certain cases, the chain may rub against the frame when up-shifting on BULLS Sonic models with the GES 3 drive system. The frame needs to be replaced in such cases.

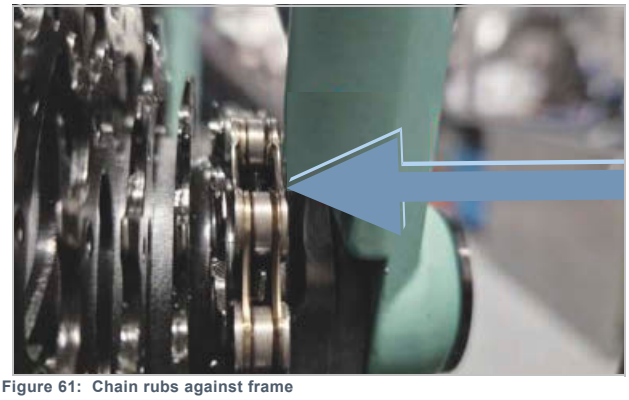

Figure 61: Chain rubs against frame

▶ Use a file to remove the excess corner on the frame.

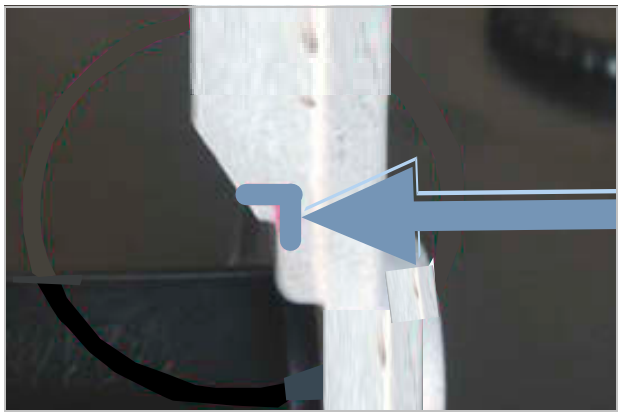

Figure 62: Rotation direction arrow on MTB tyres

5.3.4 Preparing the wheel

There is an arrow on the sides of the tyres with the inscription ROTATION to show the direction of rotation. The inscription says DRIVE on older tyres. The rotation direction arrow indicates the recommended direction of rotation. On road tyres, the direction of rotation is mainly for optical reasons.

Figure 63: Rotation direction arrow

The direction of rotation is much more important on off-road terrain because the tread creates an interlock with the ground. While the rear wheel needs to transmit the drive forces, the front wheel is responsible for transmitting braking and steering forces. Drive and braking forces have different directions of action. This is why some tyres are mounted on the front and rear wheels in opposite directions. On these tyres, there are two rotation direction arrowe: the rotation direction arrow FRONT indicates the recommended rotation direction for the front wheel.

- The REAR rotation direction arrow indicates the recommended direction of rotation for the rear wheel.

Figure 64: Rotation direction arrow on MTB tyres

▶ The rotation direction arrow must point in the direction of travel when the wheel is placed in the fork.

▶ There are also non-directional tyre profiles with no rotation direction arrow.

5.4 Checking the components

▶ Check that the pedelec against the assembly report to ensure it is complete.

5.4.1 Checking the stem and handlebars

5.4.1.1 Checking the connections

1 Stand in front of the pedelec. Clamp the front wheel between your legs. Grasp the handlebar grips.

2 Try to twist the handlebars against the direction of the front wheel.

⇨ The stem must not move or twist.

3 If the stem can be twisted, check fastening.

⇨ If the stem cannot be fastened, fit a new stem.

5.4.1.2 Checking stem is firmly in position

1 Press full body weight on the handlebars.

⇨ The handlebars must not move downwards in the fork.

Stem with clamping lever version I

2 If the handlebars should move, increase the lever tension in the *clamping lever*.

3 Turn knurled nut in a clockwise direction with the *clamping lever* open.

4 Close clamping lever and check stem is firmly in position again.

5 If the handlebars cannot be fastened, fit a new stem.

Stem with clamping lever version II and stem with screw

▶ If the handlebars cannot be fastened, contact the pedelec manufacturer.

5.4.1.3 Checking the bearing clearance

1 Place the fingers of one hand on the upper headset cup. Pull the front wheel brake with the other hand and try to push the pedelec backwards and forwards.
Keep in mind that there may be noticeable backlash due to worn-out bearing bushes or brake lining backlash in suspension forks and disc brakes.

⇨ The headset cup halves must not move towards one another.

2 Adjust bearing clearance as per the stem repair manual as quickly as possible; otherwise, the bearing will become damaged.

6 Assembly instructions for online sales

⚠CAUTION Crash caused by incorrectly configured tightening torque

If a screw is fastened too tightly, it may break. If a screw is not fastened enough, it may loosen. This will result in a crash with injuries.

▶ Always observe the indicated tightening torques on the screw, the component and in the operating instructions.

Prior knowledge is required for assembly. If you don't have any prior knowledge, contact specialist dealer.

⚠CAUTION Crash and crushing hazard caused by unintentional activation

There is a risk of injury if the drive system is activated unintentionally.

▶ Remove the battery.

Your specialist dealer will complete assembly and commissioning for this pedelec. The pedals were unscrewed and the handlebars repositioned before transportation. You need these instructions to get your pedelec roadworthy and ready for use after transportation.

6.1 Unpacking

▶ The packaging material consists of cardboard. Dispose of the packaging in accordance with the regulatory requirements.

Scope of delivery

☐	1 pedelec with battery
☐	2 pedals (already greased)
☐	1 charger
☐	1 set of operating instructions on CD

6.2 Preparing

▶ Assemble the pedelec in a clean, dry environment. The work environment temperature should be between 15 °C and 25 °C.

▶ Secure the pedelec in a fitting stand. The fitting stand used must be approved for a maximum weight of least 30 kg.
Alternatively, you can get another person to hold the pedelec.

▶ Read the operating instructions for your pedelec.

6.3 Required tools

The following tools are required to assemble the pedelec:

	Screw wrench 15 mm
	Torque wrench Working range: 5- 40 Nm
	By.Schulz handlebars: Torx bits: 4 mm, 5 mm and 6 mm If not: Hex key bits: 4 mm, 5 mm and 6 mm

Table 17: Tools required for assembly

6.4 Straightening the handlebars

The handlebars must be turned so that they are parallel to the frame and tyres for transportation.

1 Turn handlebars clockwise until they are vertically aligned with the wheel and frame. The way the handlebars are secured depends on the stem.

6.4.1 Stem with clamping lever version I

Only applies to pedelecs with this equipment

1 Open the clamping lever on the stem quick release.

2 Pull the locking lever on the stem upwards and simultaneously pivot handlebars 90° to the left.

⇨ You feel the handlebars click into place.

3 Push in the handlebars.

4 Close the clamping lever on the stem quick release.

Figure 65: Opened clamping lever on the stem quick release (3) on the stem (2), version I, with locking lever on the stem (1)

6.4.2 Stem with clamping lever version II

Only applies to pedelecs with this equipment

1 Open the clamping lever on the stem quick release.

2 Push the *unlocking knob*.

3 Pivot the *handlebars* 90° to the right or left.

⇨ You feel the *handlebars* click into place.

4 Close the *clamping lever on the stem quick release*.

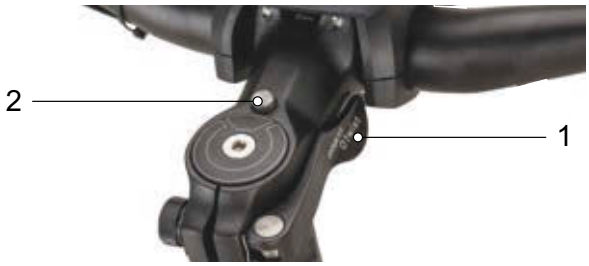

Figure 66: Stem, version II with clamping lever on the stem quick release (1) and unlocking knob (2)

6.5 Stem with screw

Only applies to pedelecs with this equipment

1 Remove the safety cap from the stem.

2 Undo the screw using a 4 mm, 5 mm, or 6 mm Torx or hex key, depending on the type of screw.

3 Turn the handlebars into the required position.

4 Fasten the screw using a 4 mm, 5 mm, or 6 mm Torx or hex key, depending on the type of screw.

5 Refasten the safety cap on the stem.

6.6 Checking the stem and handlebars are in correct position

6.6.1 Checking the connections

1 Stand in front of the pedelec. Clamp the front wheel between your legs. Grasp the handlebar grips.

2 Try to twist the handlebars against the direction of the front wheel.

⇨ The stem must not move or twist.

3 If the stem can be twisted, check fastening.

⇨ If the stem cannot be fastened, contact your specialist dealer.

6.6.2 Checking stem is firmly in position

1 Press full body weight on the handlebars.

⇨ The handlebars must not move downwards in the fork.

Stem with clamping lever version I

2 If the handlebars should move, increase the lever tension in the clamping lever.

3 Turn knurled nut in a clockwise direction with the clamping lever open.

4 Close clamping lever and check stem is firmly in position again.

5 If the handlebars cannot be fastened, contact your specialist dealer.

Stem with clamping lever version II and stem with screw

▶ If the handlebars cannot be fastened, contact your specialist dealer.

6.6.3 Checking the bearing clearance

1 Place the fingers of one hand on the upper headset cup. Pull the front wheel brake with the other hand and try to push the pedelec backwards and forwards.
Keep in mind that there may be noticeable backlash due to worn-out bearing bushes or brake lining backlash in suspension forks and disc brakes.

⇨ The headset cup halves must not move towards one another.

2 Set bearing clearance as per the stem repair manual as quickly as possible as otherwise the bearing will become damaged. Contact specialist dealer.

6.7 Fitting the pedals

The pedals have two different threads to ensure they don't come loose while the rider is pedalling.

- The pedal on the left facing the direction of travel has a left-hand thread and is marked L.
- The pedal on the right facing the direction of travel has a right-hand thread and is marked R.

The mark is either on the top end, the axle or the pedal body.

Figure 67: Example of markings on pedals

1 Coat threads in both pedals with waterproof grease.

2 Turn the pedal marked L anti-clockwise by hand into the crank arm on the left as seen when facing the direction of travel.

Figure 68: L pedal in the left-hand crank arm

3 Turn the pedal marked R anti-clockwise by hand into the crank arm on the right as seen when facing the direction of travel.

Figure 69: R pedal in the right-hand crank arm

4 Use a 15 mm spanner to fasten the left-hand pedal thread in an anti-clockwise direction and the right-hand pedal in a clockwise direction with a torque between 33 and 35 Nm.

7 Operation

7.1 Risks and hazards

⚠WARNING Injuries and death caused by blind spots

Other road users, trucks, cars and pedestrians often underestimate the speed of pedelecs. Likewise, other road users frequently do not see pedelecs. This may lead to an accident with serious injuries or even death.

- ▶ Wear a helmet. The helmet must have a reflective strip or a light in a clearly visible colour.
- ▶ Clothing should be retroreflective or as light as possible. Fluorescent materials are also suitable. High-visibility jackets and straps on your upper body ensure even greater safety.
- ▶ Always take a defensive approach to riding.
- ▶ Avoid the blind spots of vehicles turning off the road. Reduce speed as a precaution when other road users turn right.

⚠WARNING Injuries and death caused by riding incorrectly

Misjudging speeds and mistakes made while riding quickly lead to hazardous situations, Which can cause an accident with serious or fatal injuries.

- ▶ Get used to road traffic and speed little by little before riding, especially if you have not ridden a bicycle for some time.
- ▶ Practice braking hard on a regular basis.
- ▶ Take and complete a riding safety course.

⚠WARNING Injuries and death caused by distraction

A lack of concentration while riding increases the risk of an accident. This may cause a crash with serious injuries.

- ▶ Never allow yourself to be distracted by the smartphone.

⚠CAUTION Crash caused by loose clothing

Laces, scarves and other loose items may become entangled in the spokes on the *wheels* and the *chain drive*. This may cause a crash with injuries.

- ▶ Wear sturdy footwear and close-fitting clothing.

⚠CAUTION Crash caused by difficult-to-spot damage

If the pedelec topples over or you have a fall or an accident, there may be difficult-to-spot damage to components such as the brake system, quick releases or *frame*. This may cause a crash with injuries.

- ▶ Take pedelec out of service. Contact specialist dealer.

⚠CAUTION Crash caused by dirt

Heavy dirt can impair pedelec functions, such as braking. This may cause a crash with injuries.

- ▶ Remove coarse dirt before riding.

⚠CAUTION Crash caused by material fatigue

Intensive use can cause material fatigue. A component may suddenly fail in case of material fatigue. This may cause a crash with injuries.

- ▶ Remove the pedelec from service immediately if there are any signs of material fatigue. Have your specialist dealer inspect the component.
- ▶ Arrange the mandatory full inspections with your specialist dealer on a regular basis. During the full inspection, the specialist dealer will check the pedelec for any signs of material fatigue on the frame, fork, suspension element mountings (if there are any) and components made of composite materials.

Carbon becomes brittle when exposed to heat radiation such as heating. This can cause the carbon component to break, leading to a crash with injuries.

- ▶ Never expose carbon components on the pedelec to strong sources of heat.

⚠CAUTION Crash caused by poor road conditions

Loose objects, such as branches and twigs, may become caught in the wheels and cause a crash with injuries.

- ▶ Be aware of the road conditions.
- ▶ Ride slowly and brake in good time.

The *tyres* may slip on wet roads. You must also account for a longer braking distance in wet conditions. The brake response will feel different to normal. This can cause loss of control or a crash, which may result in injuries.

- ▶ Ride slowly and brake in good time when it is raining.

Notice Off-road riding subjects arm joints to severe strain.

- ▶ Take a break from riding every 30 to 90 minutes, depending on the road surface conditions and your physical fitness.

Notice Heat or direct sunlight can cause the *tyre pressure* to increase above the permitted maximum pressure level. This can destroy the *tyres*.

- ▶ Park pedelec in the shade.
- ▶ On hot days, check the *tyre pressure* regularly and adjust it as necessary.

Notice Moisture penetrating at cold temperatures may impair individual functions due to the open structural design.

- ▶ Always keep the pedelec dry and free from frost.
- ▶ If the pedelec is used at temperatures below 3 °C, the specialist dealer must perform a full inspection beforehand and prepare it for winter use.

7.2 Instruction and customer service

The supplying specialist dealer will provide customer service. Contact details can be found on the pedelec pass for these operating instructions. The supplying specialist dealer will also perform all inspection, modifications and repairs in the future.

7.3 Adjusting the pedelec

⚠CAUTION Crash caused by incorrectly adjusted tightening torques

If a screw is fastened too tightly, it may break. If a screw is not fastened enough, it may loosen. This will result in a crash with injuries.

▶ Always observe the tightening torque indicated on the screw and in the *operating instructions*.

Only a correctly adjusted pedelec will guarantee the desired ride comfort and health-promoting activity.

All settings must be re-configured if the body weight or maximum baggage weight changes.

7.3.1 Preparing

The following tools are required to adjust the pedelec:

	Tape measure
	Scales
	Spirit level
	Ring spanners 8 mm, 9 mm, 10 mm, 13 mm, 14 mm and 15 mm
	Torque wrench Working range 5-40 Nm
	Hex key 2 mm, 2.5 mm, 3 mm, 4 mm, 5 mm, 6 mm and 8 mm

Table 18: Tools required for assembly

	Cross-recess screwdriver
	Slotted-head screwdriver

Table 18: Tools required for assembly

7.3.2 Riding position

The starting point for a comfortable posture is the correct position of the pelvis. If the pelvis is in the wrong position, it can cause different types of pain, e.g. in the shoulder or back.

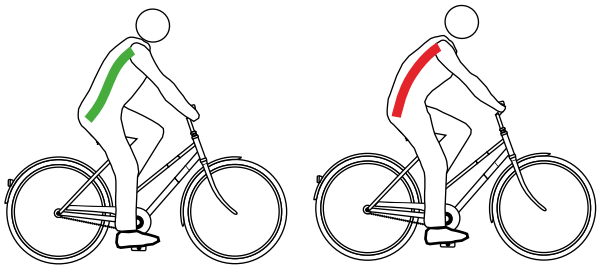

Figure 70: The pelvis is in the right position (green) or incorrect position (red)

The pelvis is in the right position if the spine forms an S-shape and a natural, easy arch.

The pelvis is positioned incorrectly if it tilts slightly backwards. As a result, the spine becomes curved and can no longer deflect to an optimal extent.

A suitable riding position must be selected beforehand depending on the pedelec type, physical fitness and desired trip distance or speed.

It is especially advisable to check and optimise the riding position once more before longer rides.

7.3.2.1 Adjusting the seat post to body weight

The correct functioning of the following seat posts depends on the body weight:

- Suspension seat post,
- Rhomboid seat post
- Lowerable seat post

If the body weight falls below or exceeds the specifications in Section Weight, either the seat post spring or, in the case of integrated seat posts, the complete seat post must be replaced with a seat post from the same product series that is appropriate for the body weight.

▶ Contact your specialist dealer.

7.3.3 Saddle

7.3.3.1 Replacing the saddle

If the pre-mounted saddle is uncomfortable or causes pain, a saddle optimised to the rider's physique must be used.

7.3.3.2 Straightening the saddle

▶ Position saddle in direction of travel. In doing so, align the tip of the saddle with the top tube.

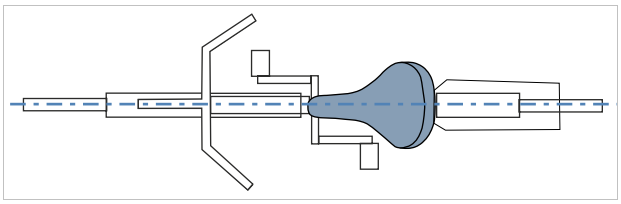

Figure 71: Positioning the saddle in direction of travel

7.3.3.3 Adjusting the saddle height

✓ To adjust the saddle height safely, either:

- Push the pedelec near to a wall so that the pedelec rider can lean on the wall to support themselves or
- Ask another person to hold the pedelec.

1 Use the seat height formula to roughly set the saddle height:
Seat height (*SH*) = inner leg length (*l*) × 0.9

2 Climb onto the bicycle.

3 Place your heel on the pedal and extend your leg, so that the pedal is at the lowest crank rotation point. Your knee should now be fully extended.

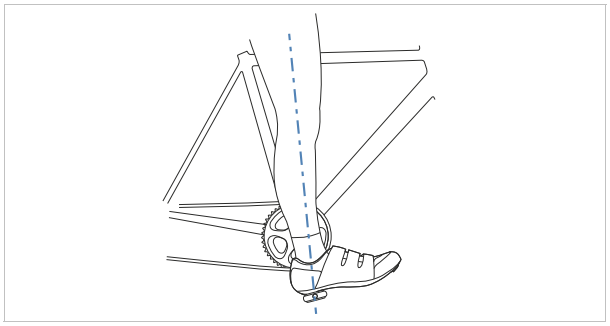

Figure 72: Heel method

4 Take a test ride.

⇨ Pedelec riders sit straight on the saddle at an optimal saddle height.

- If the pelvis moves to the left and right as you pedal, the saddle is too high.
- If your knees are painful after a few kilometres, the saddle is too low.

⇨ Position the seat post according to needs if necessary. Adjust the seat height with the quick release.

5 Open the quick release on the seat post to change the seat height (1). To do so, push the clamping lever away from the seat post (3).

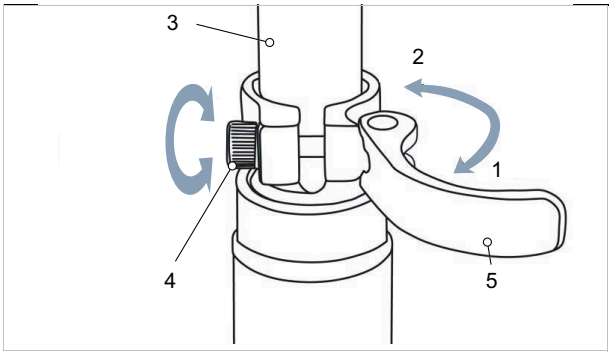

Figure 73: Opening the seat post quick release

6 Set the seat post to the required height.

⚠CAUTION Crash caused by an excessively high seat post setting

A *seat post* with is set too high will cause the *seat post* or the *frame* to break. This will result in a crash with injuries.

▶ Do not pull the seat post out of the frame beyond the minimum insertion depth marking.

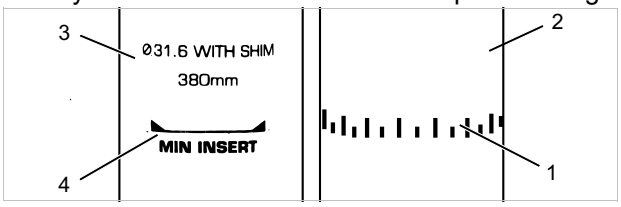

Figure 74: Detailed view of the seat post – examples of the minimum insertion depth marking

7 To close it, push the *seat post clamping lever* as far as it will go into the *seat post* (2).

8 Check *the clamping force of the quick releases.*

7.3.3.4 Adjusting the saddle height with the remote control

Use the seat height formula to set the saddle height: Seat height (*SH*) = inner leg length (*l*) × 0.9

Notice If you are unable to achieve the required saddle height, lower the seat post further into the seat tube. The seat post Bowden cable must be tightened in the frame up to the remote control to the same length as the seat post was lowered. If this is not possible, contact your specialist dealer.

7.3.3.5 Adjusting the saddle position

The saddle can be shifted on the saddle frame. The right horizontal position ensures an optimal leverage position for legs. This prevents knee pain and incorrect, painful pelvis positions. If you have displaced the saddle more than 10 mm, you need to adjust the saddle height again since both settings affect one another.

✓ You must only adjust the saddle setting when the bicycle is stationary.

✓ To set the saddle position, either:

- Push the pedelec near to a wall so that the pedelec rider can lean on the wall to support themselves or
- Ask another person to hold the pedelec.

✓ Move the saddle within its permitted displacement range only (marked on the saddle stay).

1 Climb onto the pedelec.

2 Place the pedals into the vertical position with your feet.

⇨ Pedelec riders are adopting the optimal saddle position if the perpendicular line from the kneecap runs through the pedal axle.

▶ If the perpendicular line crosses behind the pedal, bring the saddle further forward.

▶ If the perpendicular line crosses in front of the pedal, bring the saddle further back.

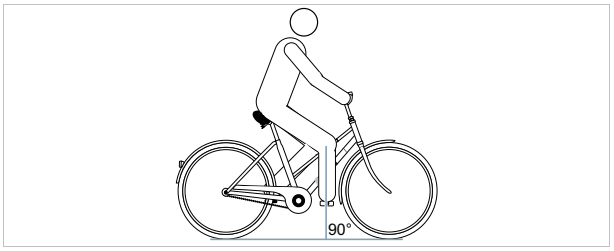

Figure 75: Knee cap perpendicular line

3 Unfasten and adjust the designated screw connections, and clamp them with the maximum tightening torque for the saddle clamping screws.

7.3.3.6 Adjusting the saddle tilt

The saddle tilt must be adjusted to the seat height, the saddle and handlebar position, and the saddle shape to ensure an optimum fit. This allows you to optimise the seating position.

The saddle prevents pedelec riders from slipping backwards or forwards when placed in a horizontal position. This avoids seat problems. The tip of the saddle may press uncomfortably into the crotch area in any other position. It is also recommended that the saddle be perfectly aligned in the centre. This ensures that the rider is seated with their sit bones on the wide rear part of the saddle.

1 Adjust the saddle tilt to horizontal.

2 Position saddle middle so that it is completely straight.

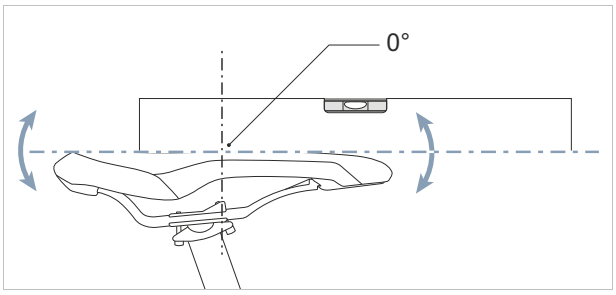

Figure 76: Horizontal saddle tilt with 0° tilt in the centre of the saddle

⇨ Pedelec riders sit comfortably on the saddle and do not slip backwards or forwards.

3 Pedelec riders tend to slip forwards or sit on the narrow part of the saddle; readjust the saddle to position or tilt the saddle very slightly backwards.

7.3.3.7 Checking the saddle

▶ Check the saddle after adjustment.

7.3.4 Handlebars

7.3.4.1 Replacing the handlebars

▶ Check handlebar width and hand position.

▶ Have handlebars replaced at the specialist dealer's if necessary.

7.3.4.2 Adjusting the handlebar width

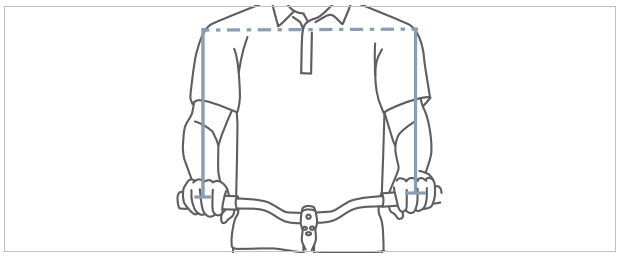

Figure 77: Determining the optimal handlebar width

The handlebar width should be as wide as the rider's shoulders as a minimum. This is measured from mid-point to mid-point on the hand contact surfaces. The wider the handlebars are, the more control they provide, although wide handlebars require greater supporting force. Wider handlebars are particularly useful to ensure a safer ride for loaded touring bikes.

7.3.4.3 Adjusting the handlebars

The handlebars and their position determine the posture that the pedelec rider adopts on the pedelec.

1 After selecting the seating position, determine the angle of the upper body and the upper arm.

2 Tension the back muscles when adjusting the handlebars. The only way to stabilise the spine and protect it from excessive strain is to tension the back and abdominal muscles. Passive muscles are not able to perform this important task.

3 Set the required handlebar position on the stem by adjusting the stem height and angle.

4 After adjusting the handlebars, check the saddle height and riding position again. The position of the pelvis on the saddle may have changed when the handlebars were adjusted. This can have considerable impact on the position of the hip joint due to the pelvis tilting and may change the usable leg length on the saddle support by up to 3 cm.

5 Correct the saddle height and position if necessary.

7.3.5 Stem

7.3.5.1 Adjusting the handlebar height with quick release

1 Open the stem clamping lever.

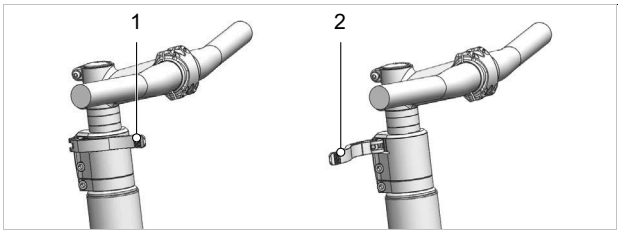

Figure 78: Open (2) and closed (1) stem clamping lever; All Up used as an example

2 Pull out the handlebars to the required height. Observe minimum insertion depth.

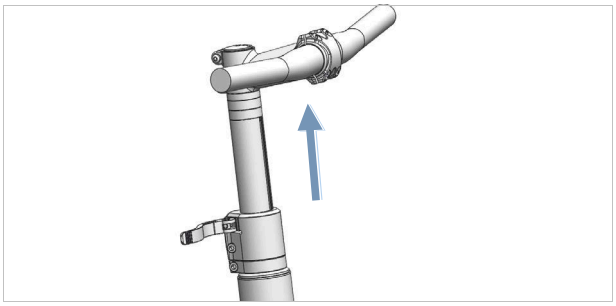

Figure 79: Pulling the handlebars upwards; All Up used as an example

3 Close the stem clamping lever.

7.3.5.2 Checking the stem stability

▶ Hold handlebars firmly after adjusting the saddle. Press full body weight on the handlebars.

⇨ The handlebars remain stable in their position.

7.3.5.3 Adjusting the quick release clamping force

⚠CAUTION Crash caused by incorrectly set clamping force

Applying excessive clamping force damages the quick release. Insufficient clamping force will result in unfavourable transmission of force. This can cause components to break. This will result in a crash with injuries.

Never fasten a quick release using a tool (e.g. hammer or pliers).

If the *handlebar clamping lever* stops before reaching its end position, unscrew the *knurled nut*.

▶ Tighten the *knurled nut on the seat post* if the seat post clamping lever's *clamping force* is not effective enough.

▶ Contact your specialist dealer if the clamping force cannot be set.

7.3.5.4 Adjusting the quill stem

In the case of a quill stem, the stem and fork steerer form a permanently interconnected component, which is clamped in the fork steerer. The stem and shaft must be replaced together.

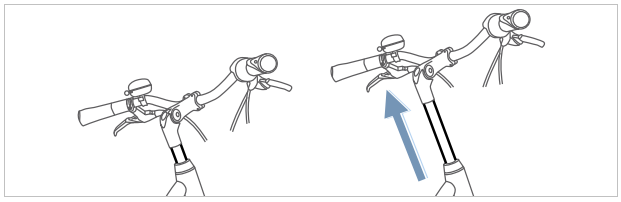

Figure 80: Adjusting the quill stem height

1 Undo screw.

2 Pull quill stem out.

3 Tighten screw.

7.3.5.5 Adjusting the Ahead stem

In the case of an Ahead stem, the stem is placed directly on the fork steerer, which protrudes over the frame.

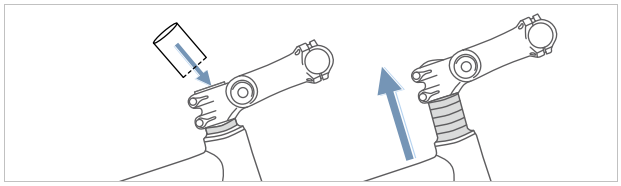

Figure 81: Raising the Ahead stem by fitting spacer rings

The handlebar height is adjusted once during production using spacer rings. The part of the fork steerer protruding is then cut off. The handlebar stem can then no longer be set higher, but only slightly lower.

7.3.5.6 Adjusting the angle-adjustable stem

Angle-adjustable stems are available in different lengths for quill and Ahead stems.

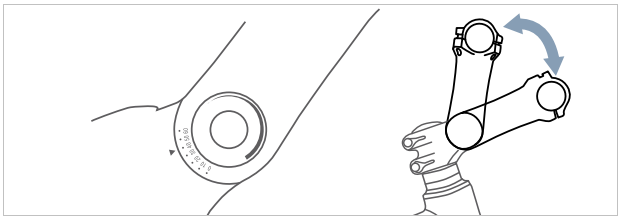

Figure 82: Different versions of angle-adjustable stems

Adjusting the stem angle (c) changes both the distance from the upper body to the handlebars (b) and the handlebar height (a).

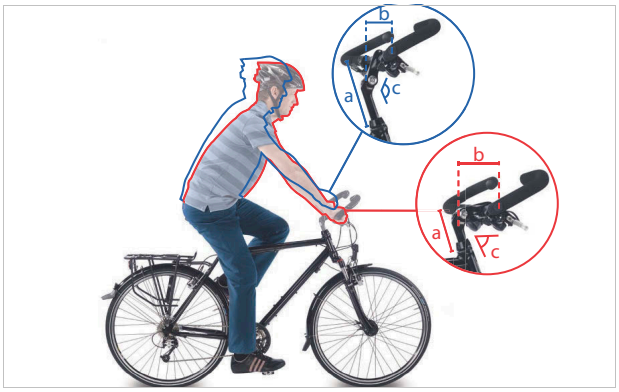

Figure 83: City bike (blue) and trekking bike position (red) by changing the angle

7.3.5.7 Checking the stem

▶ Check saddle stem after adjusting it (see Section 8.5.5).

7.3.6 Handles

7.3.6.1 Adjusting the ergonomic handles

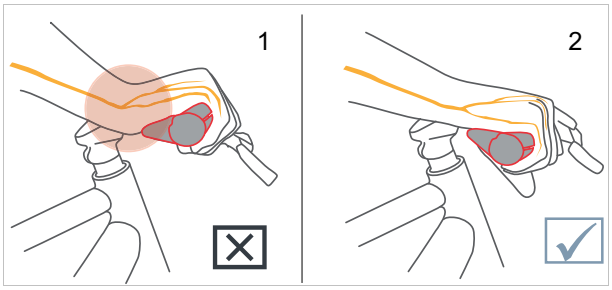

Figure 84: Incorrect (1) and correct (2) position of the handle

1 Undo handle clamping screw.

2 Turn handle into the right position.

3 Fasten handle clamping screw with the torque value indicated there.

⇨ The handles are firmly fastened.

⇨ The pull-off force of the handles is at least 100 N in the roadster, city and trekking positions, and at least 200 N in the sporty position.

7.3.6.2 Checking the handlebars

▶ Check handlebars after adjusting the handles.

7.3.7 Tyres

The following applies to all tyres:

▶ Never exceed or go below the minimum and maximum pressure limits indicated on the tyre.

The correct tyre pressure largely depends on the weight load on the tyres. This load is determined by the pedelec's tare weight, the rider's body weight and the baggage load.

Unlike cars, the weight of the vehicle has little impact on the total weight. Moreover, the personal preferences for low rolling resistance or a high degree of suspension comfort vary a great deal.

It is important to remember that

- the higher the tyre pressure is, the lower the wear, rolling resistance and the risk of breakdown are.
- The lower the pressure in the tyre is, the greater the comfort and grip is that the tyre offers.

In the case of pedelecs used on the road, the rule is the greater the tyre pressure is, the lower the tyre rolling resistance is. The risk of breakdown is also lower when the pressure is high. A permanently excessively low tyre pressure often leads to premature wear in the tyre. Cracking in the side wall is a typical consequence of very low tyre pressure. Abrasion is also unnecessarily high.

On the other hand, a tyre can absorb road impacts more effectively at a low pressure.

As a general rule, wide tyres are used at a lower tyre pressure. They provide the option of exploiting the advantages of the lower tyre pressure without the serious disadvantages it causes with regard to wear, rolling resistance and breakdown protection.

▶ Pump the tyre to the recommend tyre pressure.

Tyre width	Tyre pressure (in bar) for body weight		
	about 60 kg	about 80 kg	about 110 kg
25 mm	6.0	7.0	8.0
28 mm	5.5	6.5	7.5
32 mm	4.5	5.5	6.5
37 mm	4.0	5.0	6.0
40 mm	3.5	4.5	6.0
47 mm	3.0	4.0	5.0
50 mm	2.5	4.0	5.0
55 mm	2.0	3.0	4.0
60 mm	2.0	3.0	4.0

Table 19: SCHWALBE recommend tyre pressure

4 Perform a visual check on tyres.

Figure 85: Correct tyre pressure. The tyre is barely deformed under the load of the body weight

Figure 86: Much too little tyre pressure

7.3.8 Brake

The handbrake grip distance can be adjusted to ensure that it can be reached more easily. The pressure point can also be adjusted to the pedelec rider's preferences.

7.3.8.1 Retracting the brake linings

Disc brakes require a break-in period. The braking force increases over time. The braking force is increased during the break-in period. This is also the case when the brake pads or brake discs are replaced.

1 Accelerate pedelec to 25 km/h.

2 Brake pedelec until it comes to a halt.

3 Repeat process 30 to 50 times. The disc brake is retracted and provides optimal braking power.

7.3.9 Determining the sitting position

The starting point for a comfortable posture is the correct position of the pelvis. If the pelvis is in the wrong position, it can cause different types of pain, e.g. in the shoulder or back.

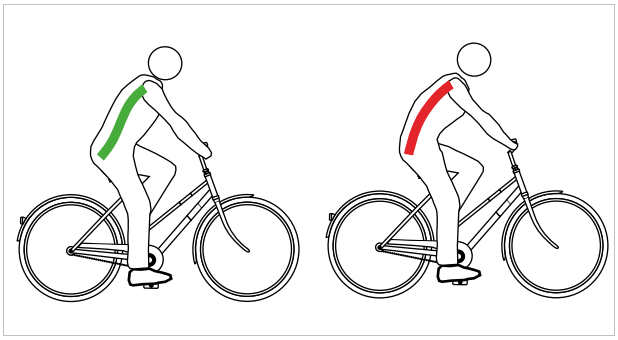

Figure 87: The pelvis is in the right position (green) or incorrect position (red)

The pelvis is in the right position if the spine forms an S-shape and a natural, easy arch.

The pelvis is positioned incorrectly if it tilts slightly backwards. As a result, the spine becomes curved and can no longer deflect to an optimal extent.

A suitable sitting position must be selected beforehand depending on the pedelec type, physical fitness and desired trip distance or speed.

It is especially advisable to check and optimise the sitting position once more before longer rides.

Position on roadster	Position on city bike
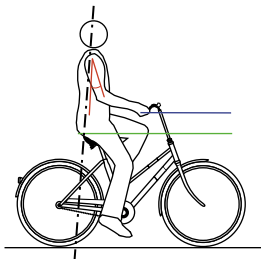	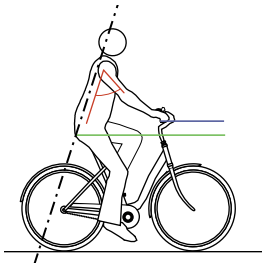
Angle of upper body (black dashed line)	
Upright, almost vertical posture, Back at an angle of almost 90°. Handlebars and handles are very close to the upper body.	Slightly inclined upper body, back at an angle of 60°…70°.
Upper arm-upper body angle (red line)	
Extremely acute angle at around 20°. The upper arms are almost parallel to the upper body. Hands are simply placed loosely on the handlebars.	An angle of 75°–80° is optimum. Many people prefer a smaller angle of up to 60° as it requires to less effort to support the shoulders, arms and hands.
Saddle-handlebar height difference [cm] (blue and green line)	
>10 The handlebars are positioned far higher than the saddle.	10…5 The handlebars are positioned higher than the saddle.
Benefits	
The spine is intuitively moved into its natural S-shape. The strain on arms and hands is very slight – no effort required to support.	The upright position provides a good overview in traffic. Force can be applied to the pedals when pedalling without using much energy.
Disadvantages	
Force is applied relatively inefficiently to the pedals. Weight rests exclusively on the buttocks. The spine slumps after a short time for many people (pelvic straightening).	The arms are often stretched through to the high handlebars – this leads to tense shoulders and painful hands. The spine tends to slump quickly due to the "high position".
Fitness level and use	
Low fitness level, occasional cyclists.	Medium fitness level, city cyclists.

Table 20: Overview of sitting positions

7.3.10 Seat post

7.3.10.1 Adjusting the seat post to body weight

Not included in price

The correct functioning of the following seat posts depends on the body weight:

- Suspension seat post,
- Rhomboid seat post
- Lowerable seat post

If the body weight falls below or exceeds the specifications in Section Dimensions, either the seat post spring or, in the case of integrated seat posts, the complete seat post must be replaced with a seat post from the same product series that is appropriate for the body weight.

The pre-tensioning in non-damped suspension seat posts must be adjusted in such a way that the suspension seat post does not deflect with just body weight. This prevents the suspension seat post from deflecting and bobbing intermittently at higher pedalling frequencies or if the rider pedals irregularly.

The spring stiffness can be set lower with damped suspension seat posts, thus making use of the negative deflection.

7.3.11 Saddle

7.3.11.1 Replacing the saddle

Not included in price

If the pre-mounted saddle is uncomfortable or causes pain, a saddle optimised to the rider’s physique must be used.

1. Determining the saddle shape (see Section 7.3.11.2).
2. Determining the minimum saddle width (see Section 7.3.11.3).
3. Selecting the saddle hardness (see Section 7.3.11.4).

7.3.11.2 Determining the saddle shape

Ladies' saddle

To distribute the pressure optimally over the female bone structure in the seat area, a ladies’ saddle should:

- have a relief opening far to the front
- have a wide, V--shaped saddle edge.

Figure 88: Example: Ergotec ladies' saddle

Men's saddle

Numbness when riding a pedelec is often caused by high pressure in the sensitive perineal area. If the saddle is adjusted incorrectly, too narrow or too hard, the nose of the saddle presses directly onto the genitals. Blood circulation deteriorates.

The genitals on the outside are seldom the cause of discomfort since they can move out of the way and are not compressed by bone structures.

You should always consult a doctor if you have problems with your prostate. After a prostate operation or inflammation, it is advisable to avoid any pressure in the perineal area and take a longer break from pedelec riding after consulting your doctor. A prostate saddle should then be used. This reduces the pressure in the perineal area by up to 100%.

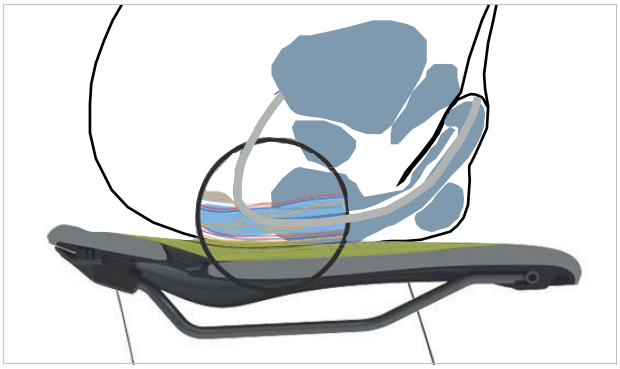

Figure 89: Pressure points on a saddle, male anatomy

To distribute the pressure on the male bone structure in the seat area optimally, the saddle should:

- Shift the pressure to the sitting bones and parts of the pubic arches
- The perineal area must remain as free of pressure as possible.

Figure 90: Example: Ergotec men's saddle

7.3.11.3 Determining the minimum saddle width

With corrugated cardboard

1 Place corrugated cardboard on a flat, hard, unpadded seat.

2 Sit in the middle of the corrugated board.

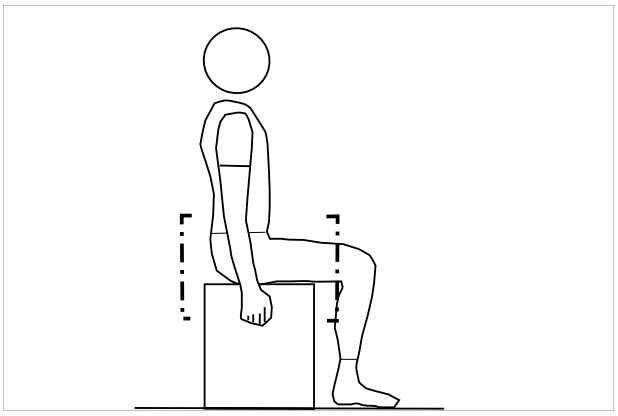

Figure 91: Sitting on the corrugated board

3 Pull the seat with your hands and arch your back.

⇨ The sitting bones are more prominent and stand out more clearly on the corrugated cardboard.

4 Trace the outer edges of the two depressed areas in a circle.

5 Determine the centre of both circles and mark them with a dot.

6 Measure the distance between the two centres.

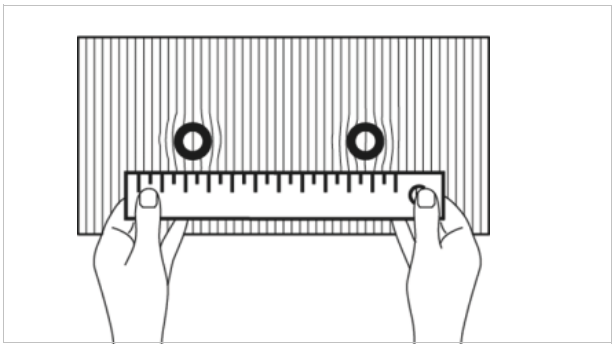

Figure 92: Measuring the distance

⇨ The distance between the two centre points is the sit bone distance and corresponds to the minimum saddle width.

7 Calculate saddle width (see Section 6.5.4.4).

Using calculation

Depending on the position, the following value is added to the minimum saddle width.

Position on roadster	+ 4 cm
Position on city bike	+ 3 cm
Position on trekking bike	+ 2 cm
Position on sports bike	+ 1 cm
Triathlon/time trials	+ 0 cm

Table 21: Calculating the saddle width

7.3.11.4 Selecting the saddle hardness

Saddles are available in a wide range of hardnesses and must be adapted to the pedelec's use:

- A pedelec that is mainly used for commuting in jeans calls for a soft saddle.
- A pedelec that is mainly used for sports riding with padded cycling shorts requires a hard saddle.

If the degree of hardness is not suitable, a new saddle must be selected.

7.3.11.5 Adjusting the saddle hardness

Only applies to pedelecs with this equipment

The hardness of air cushion saddles can be adjusted using the pump valve beneath the seat surface.

Soft	Pump 3 times
Medium	Pump 5 times
Hard	Pump 10 times

Table 22: BULLS settings, air cushion saddle

7.3.11.6 Straightening the saddle

▶ Position saddle in direction of travel. In doing so, align the tip of the saddle with the top tube.

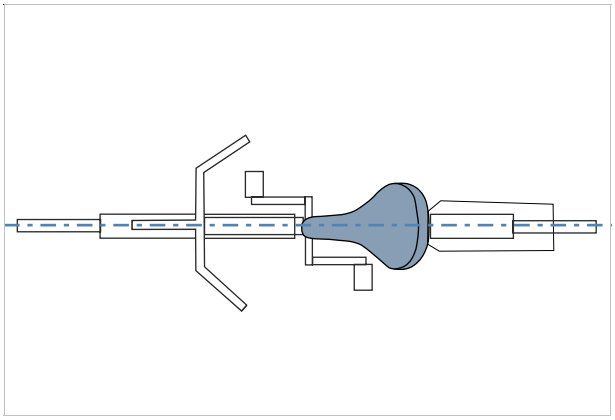

Figure 93: Positioning the saddle in direction of travel

7.3.11.7 Adjusting the saddle height

✓ To adjust the saddle height safely, either:

- Push the pedelec near to a wall so that the pedelec rider can lean on the wall to support themselves or
- Ask another person to hold the pedelec.

1 Use the seat height formula to roughly set the saddle height:
Seat height (*SH*) = inner leg length (*l*) × 0.9

2 Climb onto the bicycle.

3 Place your heel on the pedal and extend your leg, so that the pedal is at the lowest crank rotation point. Your knee should now be fully extended.

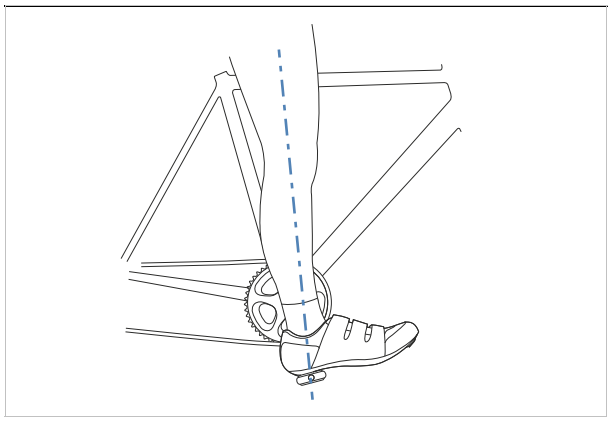

Figure 94: Heel method

4 Take a test ride.

⇨ Pedelec riders sit straight on the saddle at an optimal saddle height.

- If the pelvis moves to the left and right as you pedal, the saddle is too high.
- If your knees are painful after a few kilometres, the saddle is too low.

⇨ Position the seat post according to needs if necessary. Adjust the seat height with the quick release.

5 Open the quick release on the seat post to change the seat height (1). To do so, push the clamping lever away from the seat post (3).

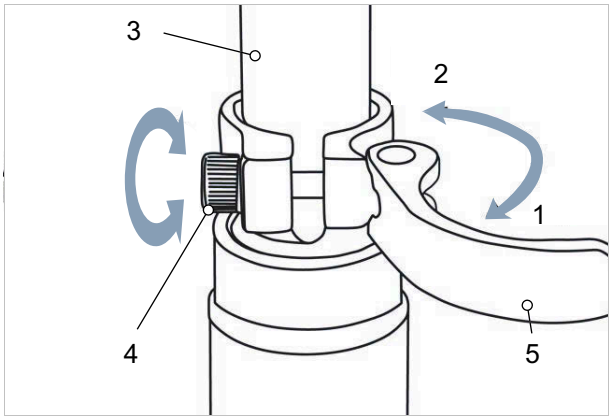

Figure 95: Opening the seat post quick release

Set the seat post to the required height.

⚠CAUTION Crash caused by an excessively high seat post setting

A *seat post* with is set too high will cause the *seat post* or the *frame* to break. This will result in a crash with injuries.

6 Do not pull the seat post out of the frame beyond the minimum insertion depth marking.

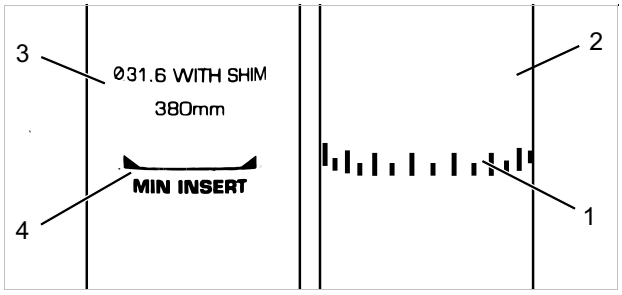

Figure 96: Detailed view of the seat post – examples of the minimum insertion depth marking

7 To close it, push the *seat post clamping lever* as far as it will go into the *seat post* (2).

8 Check the clamping force of the quick releases.

7.3.11.8 Adjusting the saddle height with the remote control

Use the seat height formula to set the saddle height:
Seat height (*SH*) = inner leg length (*l*) × 0.9

Notice

▶ If you are unable to achieve the required saddle height, lower the seat post further into the seat tube. The seat post Bowden cable must be tightened in the frame up to the remote control to the same length as the seat post was lowered.

▶ If this is not possible, contact your specialist dealer.

7.3.11.9 Adjusting the saddle position

The saddle can be shifted on the saddle frame. The right horizontal position ensures an optimal leverage position for legs. This prevents knee pain and incorrect, painful pelvis positions. If you have displaced the saddle more than 10 mm, you need to adjust the saddle height again since both settings affect one another.

✓ You must only adjust the saddle setting when the bicycle is stationary.

✓ To set the saddle position, either:

- Push the pedelec near to a wall so that the pedelec rider can lean on the wall to support themselves or
- Ask another person to hold the pedelec.

✓ Move the saddle within its permitted displacement range only (marked on the saddle stay).

1 Climb onto the pedelec.

2 Place the pedals into the vertical position with your feet.

⇨ Pedelec riders are adopting the optimal saddle position if the perpendicular line from the kneecap runs through the pedal axle.

▶ If the perpendicular line crosses behind the pedal, bring the saddle further forward.

▶ If the perpendicular line crosses in front of the pedal, bring the saddle further back.

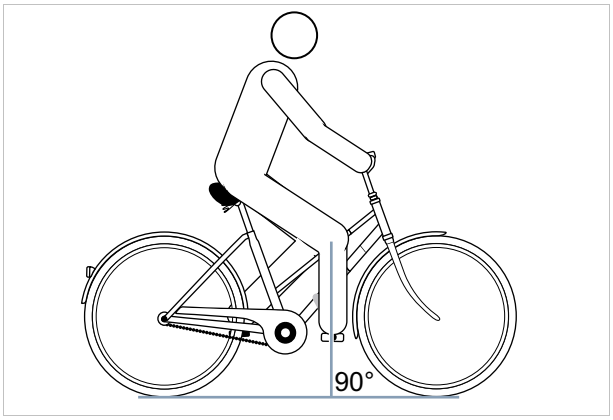

Figure 97: Knee cap perpendicular line

3 Unfasten and adjust the designated screw connections, and clamp them with the maximum tightening torque for the saddle clamping screws.

7.3.11.10 Adjusting the saddle tilt

The saddle tilt must be adjusted to the seat height, the saddle and handlebar position, and the saddle shape to ensure an optimum fit. This allows you to optimise the seating position.

The saddle prevents pedelec riders from slipping backwards or forwards when placed in a horizontal position. This avoids seat problems. The tip of the saddle may press uncomfortably into the crotch area in any other position. It is also recommended that the saddle be perfectly aligned in the centre. This ensures that the rider is seated with their sit bones on the wide rear part of the saddle.

1 Adjust the saddle tilt to horizontal.

2 Position saddle middle so that it is completely straight.

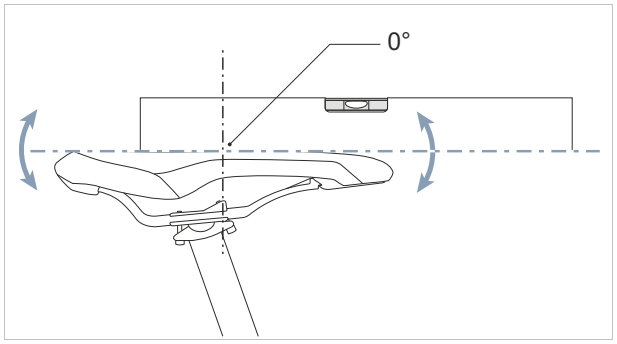

Figure 98: Horizontal saddle tilt with 0° tilt in the centre of the saddle

⇨ Pedelec riders sit comfortably on the saddle and do not slip backwards or forwards.

3 Pedelec riders tend to slip forwards or sit on the narrow part of the saddle; readjust the saddle to position (see Section 7.3.11.9) or tilt the saddle very slightly backwards.

7.3.11.11 Checking the saddle

▶ Check the saddle after adjustment (see Section 7.10.8).

7.3.12 Handlebars

7.3.12.1 Replacing the handlebars

Not included in price

- ▶ Check handlebar width and hand position.
- ▶ Have handlebars replaced at the specialist dealer's if necessary.

7.3.12.2 Adjusting the handlebar width

The handlebar width should be as wide as the rider's shoulders as a minimum. This is measured from mid-point to mid-point on the hand contact surfaces.

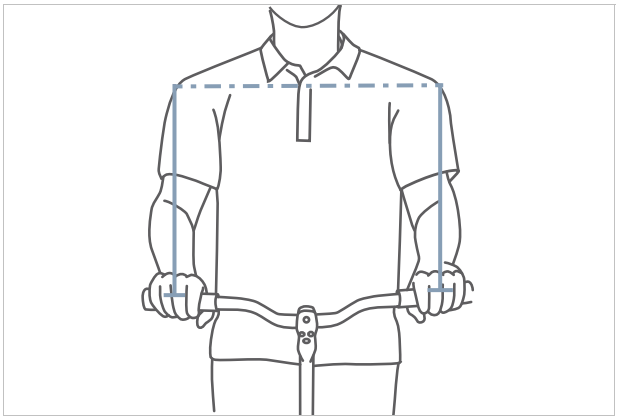

Figure 99: Determining the optimal handlebar width

The wider the handlebars are, the more control they provide, although wide handlebars require greater supporting force. Wider handlebars are particularly useful to ensure a safer ride for loaded touring bikes.

7.3.12.3 Adjusting the hand position

The hand is an optimal position on the handlebars when the forearm and hand are in a straight line, i.e. the wrist is not bent. In this way, the nerves are not pinched and do not cause pain.

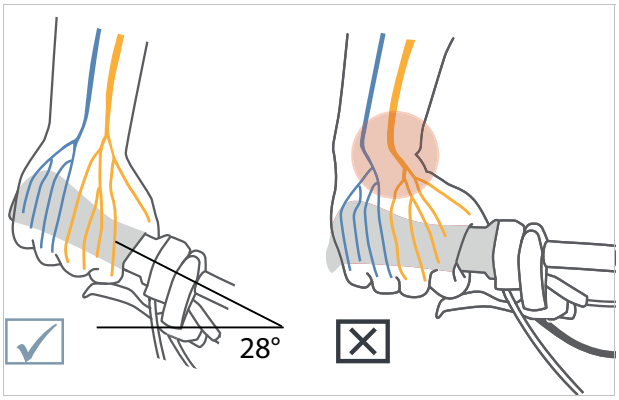

Figure 100: Distribution of nerves with curved and straight handlebars

The narrower the shoulders are, the greater the bend of the handlebars should be (maximum 28°).

Straight handlebars are advisable for sports bikes (e.g. MTB). They support direct steering behaviour, but lead to peaks in pressure and greater muscular strain on the arm and shoulder muscles.

7.3.12.4 Adjusting the handlebars

The handlebars and their position determine the posture that the pedelec rider adopts on the pedelec.

1. After selecting the seating position (see Section 0.0.2), determine the angle of the upper body and the upper arm.
2. Tension the back muscles when adjusting the handlebars. The only way to stabilise the spine and protect it from excessive strain is to tension the back and abdominal muscles. Passive muscles are not able to perform this important task.
3. Set the required handlebar position on the stem by adjusting the stem height and angle (see Section 7.3.13).
4. After adjusting the handlebars, check the saddle height and riding position again. The position of the pelvis on the saddle may have changed when the handlebars were adjusted. This can have considerable impact on the position of the hip joint due to the pelvis tilting and may change the usable leg length on the saddle support by up to 3 cm.
5. Correct the saddle height and position if necessary (see Section 0.0.4.14 and 0.0.4.17).

7.3.13 Stem

7.3.13.1 Adjusting the handlebar height with quick release

Only applies to pedelecs with this equipment

1 Open the stem clamping lever.

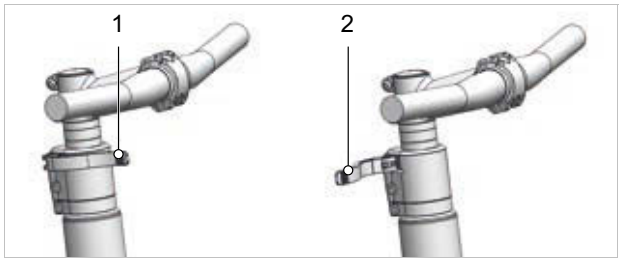

Figure 101: Open (2) and closed (1) stem clamping lever; All Up used as an example

2 Pull out the handlebars to the required height. Observe minimum insertion depth.

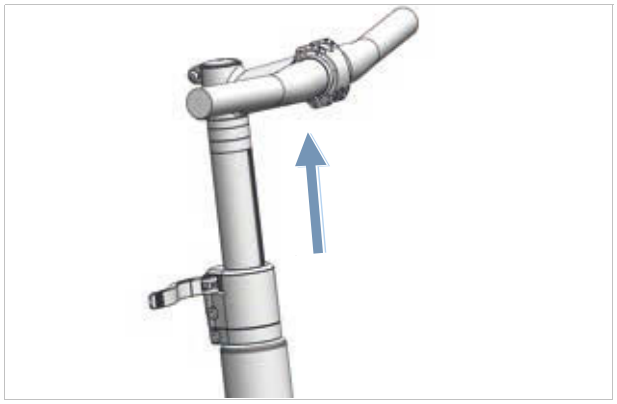

Figure 102: Pulling the handlebars upwards; All Up used as an example

3 Close the stem clamping lever.

7.3.13.2 Checking the stem stability

▶ Hold handlebars firmly after adjusting the saddle. Press full body weight on the handlebars.

⇨ The handlebars remain stable in their position.

7.3.13.3 Adjusting the quick release clamping force

⚠CAUTION Crash caused by incorrectly set clamping force

Applying excessive clamping force damages the quick release. Insufficient clamping force will result in unfavourable transmission of force. This can cause components to break. This will result in a crash with injuries.

▶ Never fasten a quick release using a tool (e.g. hammer or pliers).

If the *handlebar clamping lever* stops before reaching its end position, unscrew the *knurled nut*.

▶ Tighten the *knurled nut* on the seat post if the *seat post clamping lever's* clamping force is not effective enough.

▶ Contact your specialist dealer if the clamping force cannot be set.

7.3.13.4 Setting the quill stem

Only applies to pedelecs with this equipment

In the case of a quill stem, the stem and fork steerer form a permanently interconnected component, which is clamped in the fork steerer. The stem and shaft must be replaced together.

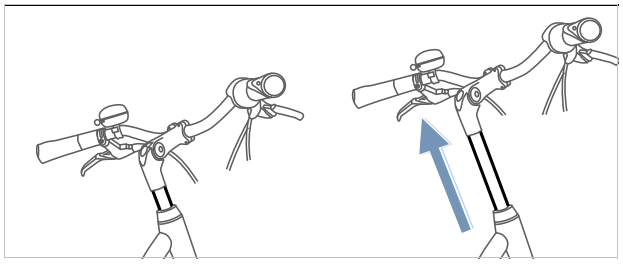

Figure 103: Adjusting the quill stem height

1 Undo screw.

2 Pull quill stem out.

3 Tighten screw.

Only applies to pedelecs with this equipment

Angle-adjustable stems are available in different lengths for quill and Ahead stems.

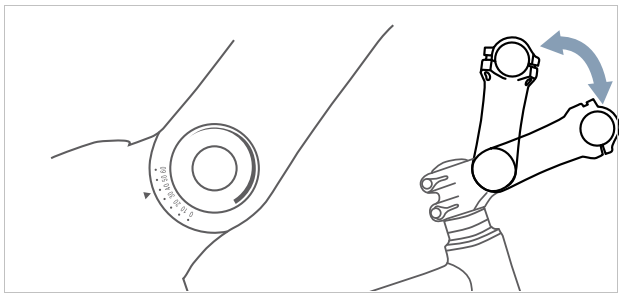

Figure 105: Different versions of angle-adjustable stems

Adjusting the stem angle (c) changes both the distance from the upper body to the handlebars (b) and the handlebar height (a).

7.3.13.5 Adjusting the Ahead stem

Only applies to pedelecs with this equipment

In the case of an Ahead stem, the stem is placed directly on the fork steerer, which protrudes over the frame.

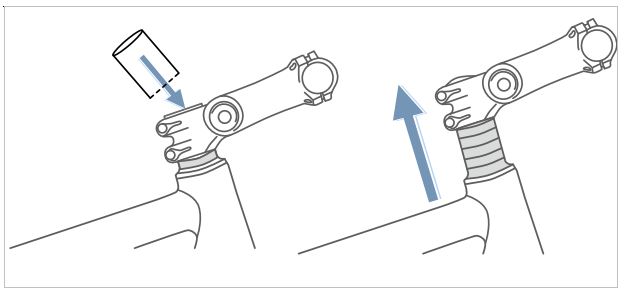

Figure 104: Raising the Ahead stem by fitting spacer rings

The handlebar height is adjusted once during production using spacer rings. The part of the fork steerer protruding is then cut off. The handlebar stem can then no longer be set higher, but only slightly lower.

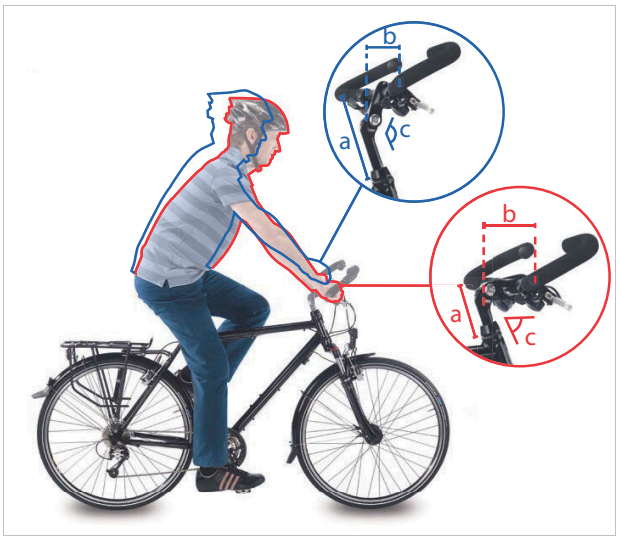

Figure 106: City bike (blue) and trekking bike position (red) by changing the angle

7.3.13.7 Checking the stem

▶ Check saddle stem after adjusting it (see Section 7.10.6).

7.3.14 Handles

7.3.14.1 Replacing the handles

Not included in price

If there is pain or numbness in the index, middle finger or thumb, this may be due to excessive pressure on the carpal tunnel exit point. On longer rides, this can increasingly cause hand fatigue and make it more and more difficult to maintain a correct hand position.

In the case of ergonomically shaped handles, the palm rests on the anatomically shaped handle. A greater contact surface means that the pressure is more evenly distributed. Nerves and vessels are no longer squeezed in the carpal tunnel.

Moreover, the hand is supported and held in the correct position so that the hand can no longer bend.

If the pre-mounted handles are uncomfortable or cause pain or numbness in the index, middle finger or thumb, ergonomic handles, bar ends or multi-position handlebars should be used.

7.3.14.2 Adjusting the ergonomic handles

Only applies to pedelecs with this equipment

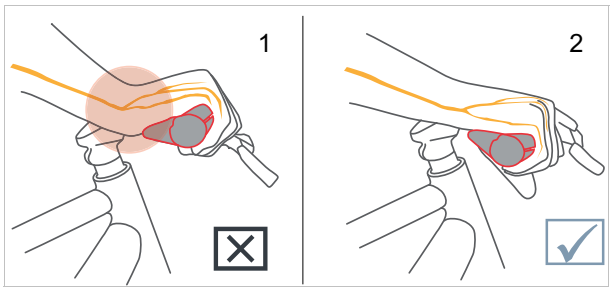

Figure 107: Incorrect (1) and correct (2) position of the handle

7.3.14.3 Checking the handlebars

▶ Check handlebars after adjusting the handles (see Section 7.10.7).

7.3.15 Tyres

7.3.15.1 Adjusting the tyre pressure

It is not possible to offer a general recommended tyre pressure for a particular pedelec or tyre. The correct tyre pressure largely depends on the weight load on the tyres, mainly determined by body weight and baggage.

Unlike cars, the weight of the vehicle has only a small impact on the total weight. Moreover, the personal preferences for low rolling resistance or a high degree of suspension comfort vary a great deal. It is important to remember that

- the higher the tyre pressure is, the lower the wear, rolling resistance and the risk of breakdown are.
- The lower the pressure in the tyre is, the greater the comfort and grip is that the tyre offers.

In the case of pedelecs used on the road, the rule is the greater the tyre pressure is, the lower the tyre rolling resistance is. The risk of breakdown is also lower when the pressure is high. A permanently excessively low tyre pressure often leads to premature wear in the tyre. Cracking in the side wall is a typical consequence of very low tyre pressure. Abrasion is also unnecessarily high.

On the other hand, a tyre can absorb road impacts more effectively at a low pressure.

As a general rule, wide tyres are used at a lower tyre pressure. They provide the option of exploiting the advantages of the lower tyre pressure without the serious disadvantages it causes with regard to wear, rolling resistance and breakdown protection.

✓ Never exceed or go below the minimum and maximum pressure limits indicated on the tyre.

1 Pump the tyre to the recommended tyre pressure.

Tyre width	Tyre pressure (in bar) for body weight		
	about 60 kg	about 80 kg	about 110 kg
25 mm	6.0	7.0	8.0
28 mm	5.5	6.5	7.5
32 mm	4.5	5.5	6.5
37 mm	4.0	5.0	6.0
40 mm	3.5	4.5	6.0
47 mm	3.0	4.0	5.0
50 mm	2.5	4.0	5.0
55 mm	2.0	3.0	4.0
60 mm	2.0	3.0	4.0

Table 23: SCHWALBE recommend tyre pressure

2 Perform a visual check on tyres.

Figure 108: Correct tyre pressure. The tyre is barely deformed under the load of the body weight

Figure 109: Much too little tyre pressure

7.3.16 Brake

The handbrake grip distance can be adjusted to ensure that it can be reached more easily. The pressure point can also be adjusted to the S pedelec rider's preferences.

7.3.16.1 Retracting the brake linings

Disc brakes require a break-in period. The braking force increases over time. The braking force is increased during the break-in period. This is also the case when the brake pads or brake discs are replaced.

1 Accelerate S pedelec to 25 km/h.

2 Brake S pedelec until it comes to a halt.

3 Repeat process 30 to 50 times.

⇨ The disc brake is retracted and provides optimal braking power.

7.3.16.2 Change handbrake position

Having the handbrake in the correct position prevents the rider from stretching their wrist too far. Moreover, the brake can also be operated without any discomfort and without changing the handle position or releasing the handle.

✓ Apply handbrake with the third finger phalanx in bursts to brake gently.

✓ The setting for the middle finger is used for S pedelec riders who brake with their middle finger or with two fingers.

1 Position your hand on the handle in such a way that the outer heel of the hand is flush with the end of the handlebar.

2 Extend the index finger (about 15°).

Figure 110: Handbrake position

3 Push handbrake outwards until the third finger phalanx sits in the recessed grip.

7.3.16.3 Changing the handbrake inclination angle

The nerves that pass through the carpal tunnel are connected to the thumb and the index and middle fingers. An excessively steep or excessively flat brake angle will cause the wrist to bend, thus narrowing the carpal tunnel. This can cause numbness and tingling in the thumb and index and middle fingers.

1 Calculate the difference between the height of the handlebars and the saddle height to determine the saddle-handlebar height difference.

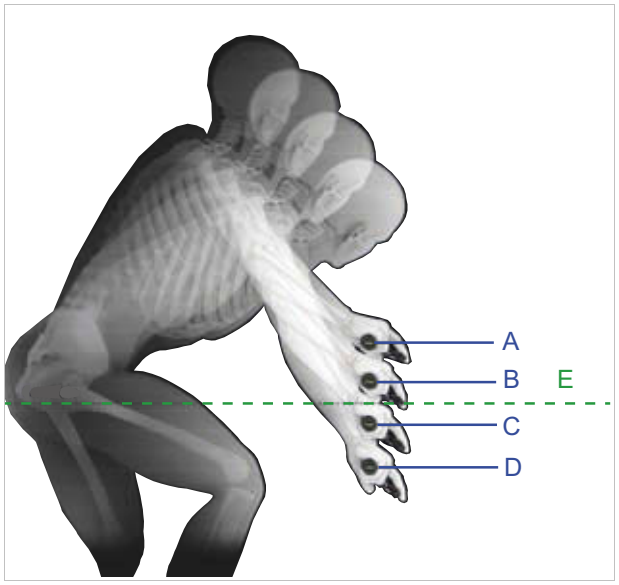

Figure 111: Example of 4 different handlebar heights (A, B, C and D) and the saddle height (E)

Calculation	Saddle-handlebar height difference [mm]
A – E	>10
B – E	0… +10
C – E	0… -10
D – E	<-10

Table 24: Examples of saddle-handlebar height difference

Adjust the angle of the handbrake so that it forms a natural extension of the forearm.

2 Set the brake lever angle as indicated in the table.

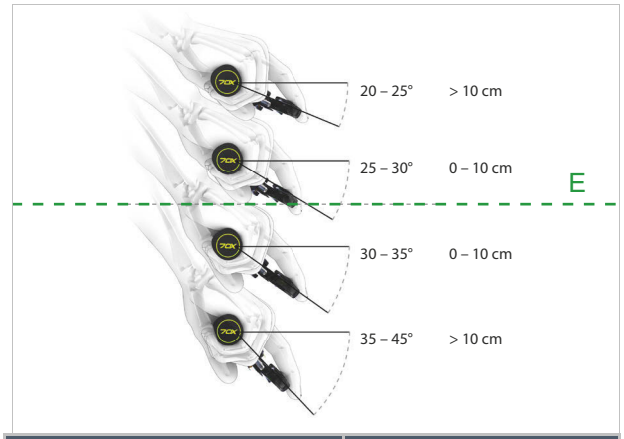

Saddle-handlebar height difference (mm)	Brake angle
>10	20° … 25°
0… 10	25° … 30°
0… -10	30° … 35°
< -10	35°…45°

Figure 112: Brake angle

7.3.16.4 Determining the grip distance

1 Measure hand size using the grip distance gauge.

2 Adjust the grip distance at the pressure point based on the hand size.

Figure 113: Handbrake positioning

Hand size	Grip distance (cm)
S	2
M	3
L	4

7.3.16.5 Setting the grip distance on a TEKTRO handbrake

Only applies to pedelecs with this equipment

Notice If the setting screw is fully removed, components inside the handbrake will also be permanently twisted off as well. The handbrake will be permanently damaged.

▶ Never completely remove setting screws.

The handbrake position can be adjusted to the rider's requirements.

▶ Undo 2 mm setting screw anti-clockwise.

⇨ The handbrake will move closer to the handlebar grip.

▶ Turn 2 mm setting screw clockwise.

⇨ The handbrake will move away from the handlebar grip.

⇨ This adjustment affects the position of the brake linings.

▶ Re-adjust the brake linings after adjustment.

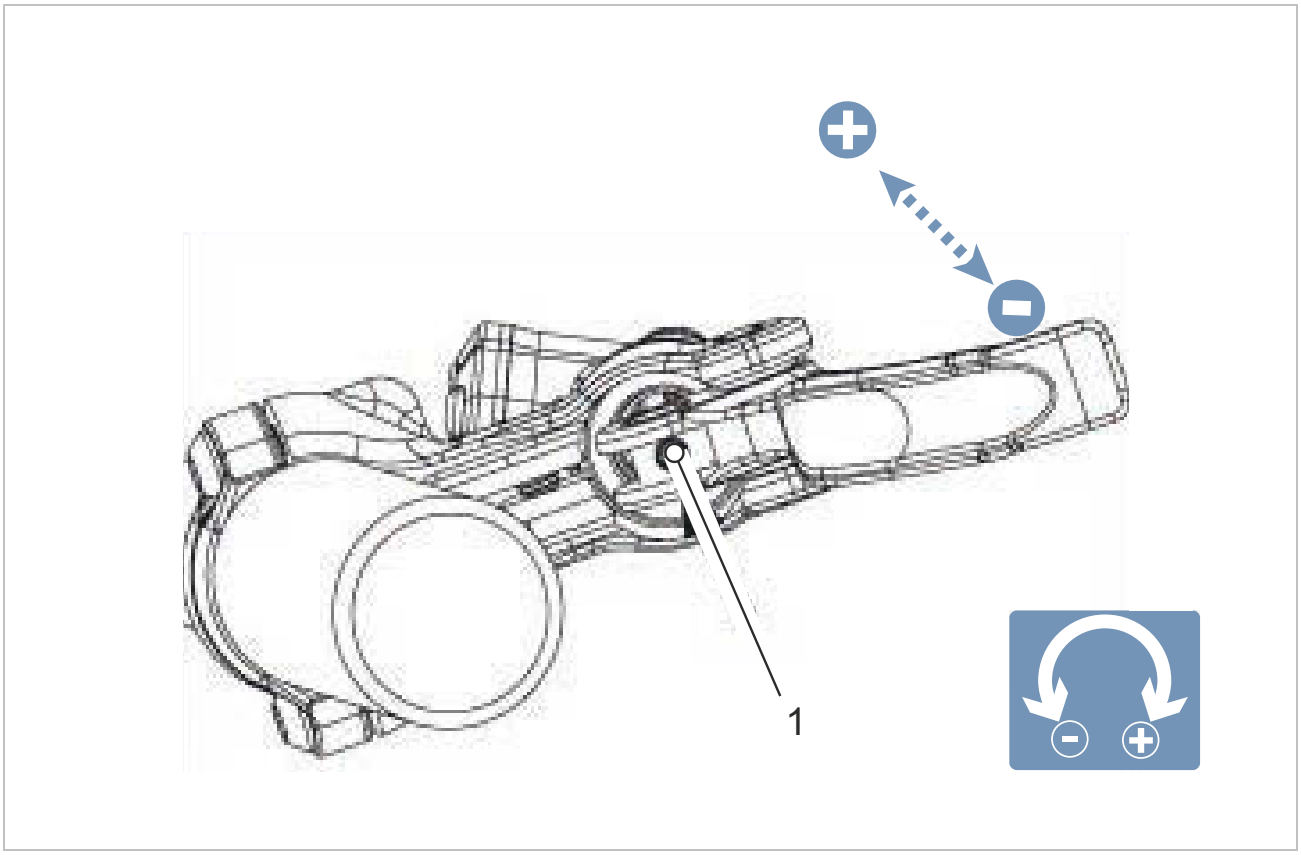

Figure 114: Setting screw position (1)

7.3.17 Control panel and gear shift

The control panel and gear shift must be adjusted to the rider's needs.

1 Undo attachment screw.

2 Place control panel or gear shift into the position where the rider can use the control panel or the shifter with their thumb and/or index finger.

3 Fasten attachment screw into position with a 4 mm hex bit with 3 Nm.

7.3.17.1 SHIMANO shifter

Only applies to vehicles with this equipment

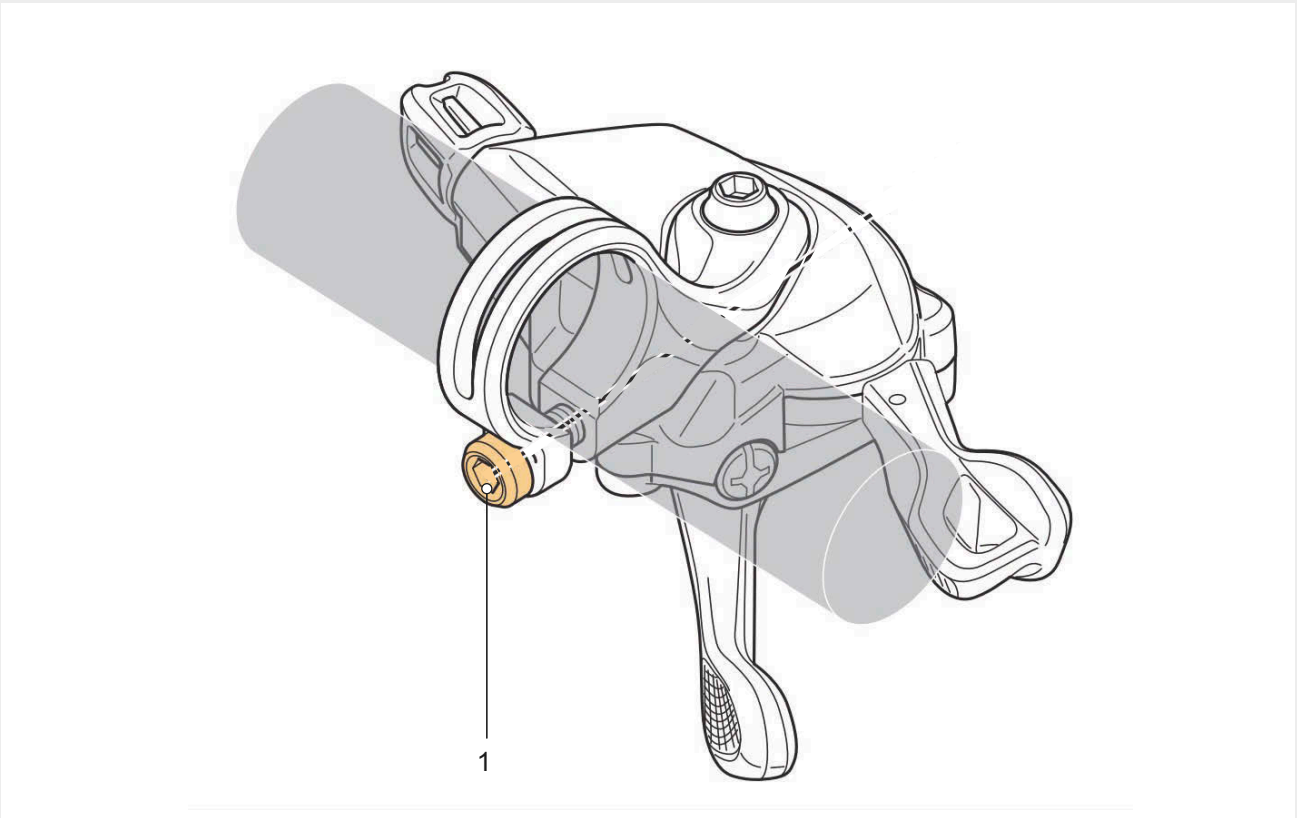

Figure 115: Position of attachment screw (1)

7.3.18 Riding light

7.3.18.1 Setting the riding light

Example 1

If the headlight is positioned too high, the rider will dazzle oncoming traffic. This can cause a serious accident with fatalities.

Example 2

Positioning the headlight correctly can ensure that oncoming traffic is not dazzled and no-one is put at risk.

Example 3

If the headlight is positioned too low, the space ahead is not illuminated to an optimum extent and the rider's vision is reduced in the dark.

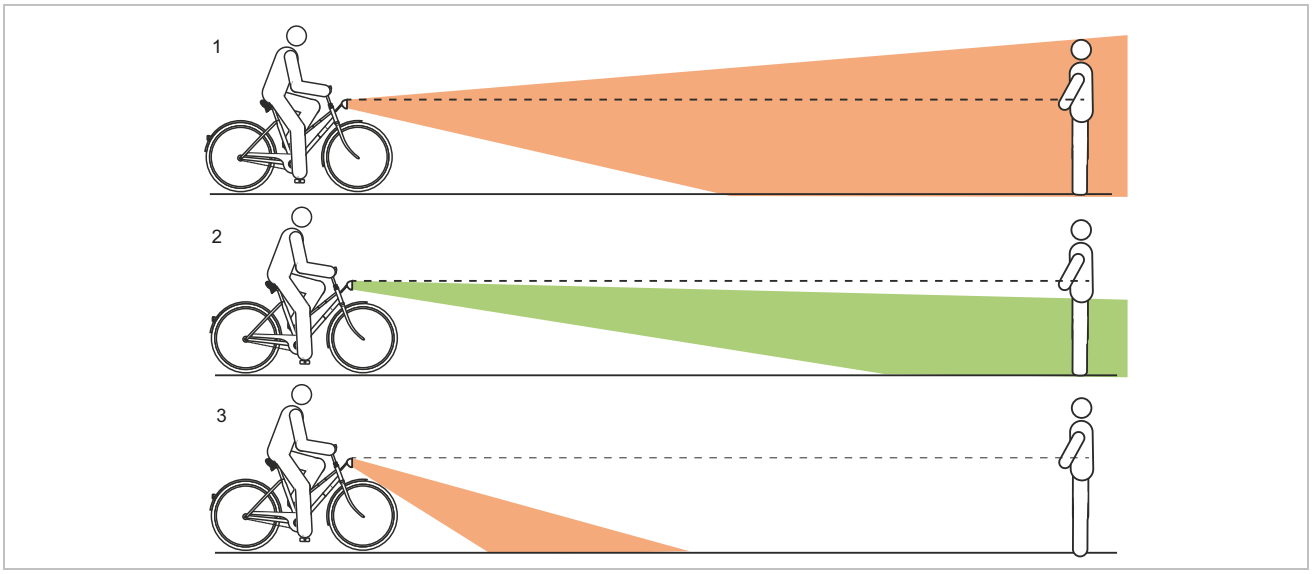

Figure 116: Light positioned too high (1), correctly (2) and too low (3)

7.3.18.2 Adjusting the headlight

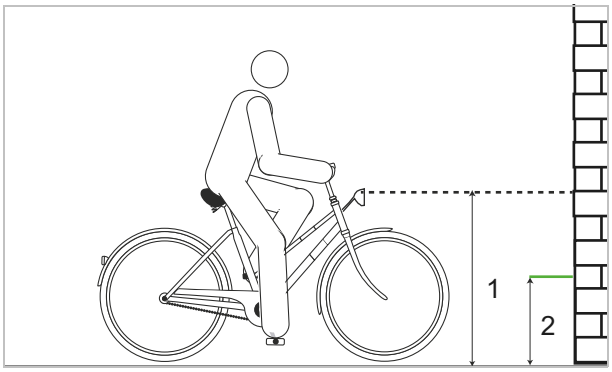

Figure 117: Measuring on the wall

1 Position the pedelec so that its front is facing a wall.

2 Mark the height of the headlight (1) on the wall with chalk.

3 Mark half the height of the headlight (2) on the wall with chalk.

4 Place pedelec 5 m in front of the wall.

5 Stand the pedelec up straight.

6 Hold the handlebars straight with both hands. Do not use the kickstand.

7 Switch on riding light.

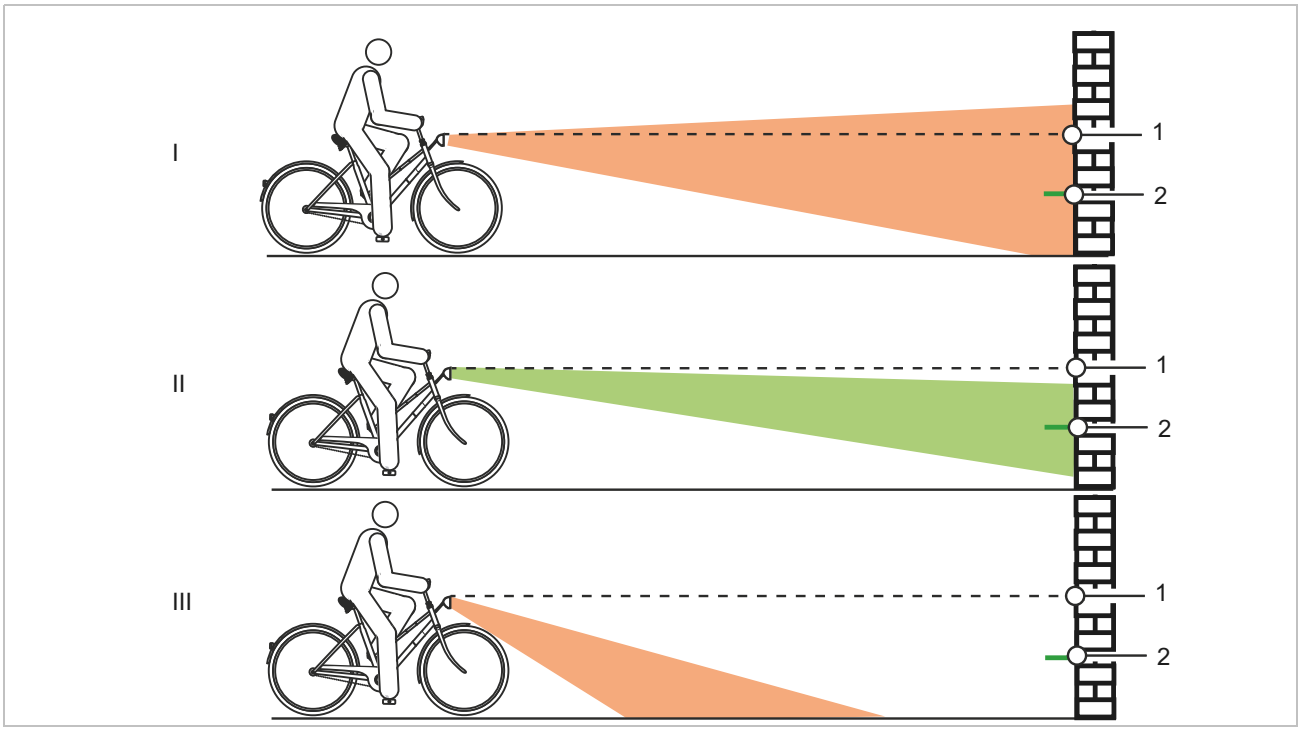

Figure 118: Light positioned too high (1), correctly (2) and too low (3)

8 Check the position of the light beam.

▶ (I) if the upper edge of the light beam is above the headlight height mark (1), the riding light will dazzle. The headlight must be positioned lower.

▶ If the mid-point of the light beam is on or slightly below the mark showing half the height of the headlight (2), the lighting is optimally positioned.

▶ If the light beam is in front of the wall, move the headlight up.

7.3.19 Adjusting the BOSCH System Controller/Mini Remote

A smartphone with the BOSCH eBike Flow app installed is required to use all drive system functions.

7.3.19.1 Installing the Bosch eBike Flow app on the smartphone

✓ Ensure the smartphone meets the minimum requirements specified in the app description.

Smartphone type		
iPhone		▶ Download eBike Flow app from App Store for free.
Android smartphone	Google Play	▶ Download eBike Flow app from the Google Play Store for free.

1 Scan the following code with your smartphone.

⇨ The BOSCH eBike Flow app will start to download in the smartphone.

2 Download the Bosch eBike Flow app onto the smartphone.

⇨ The BOSCH eBike Flow app can be used.

7.3.19.2 Pairing the System Controller control panel with a smartphone

✓ Installing the Bosch eBike Flow app on the smartphone (see Section 7.3.19.1).

✓ Switching on the electric drive system (see Section 7.16.1).

✓ The pedelec is stationary.

1 Start the BOSCH eBike Flow app.

2 Select the **<My eBike>** tab in the BOSCH eBike Flow app.

3 Select the **<Add new eBike device>** tab in the app.

4 Press the **on-off button** on the System Controller for longer than 3 seconds.

⇨ The upper bar on the battery level indicator (control panel) will flash blue.

⇨ The on-board computer will switch the Bluetooth® Low Energy connection on and change to pairing mode.

5 Release the **on-off button** on the pedelec.

6 Confirm the connection prompt in the BOSCH eBike Flow app.

7 Follow the instructions on the smartphone display.

⇨ The on-board computer is now connected to the smartphone.

⇨ The user data will be synchronised once the pairing process is complete.

7.3.19.3 Recording activities

✓ Pairing the System Controller control panel with a smartphone (see Section 7.3.19.2).

1 Agree to the storage of location data in the BOSCH eBike Flow app.

⇨ The pedelec's locations will now be recorded in the BOSCH eBike Flow app.

2 Agree to the capture and storage of location data in the BOSCH eBike Flow app.

⇨ All the pedelec's activities will be stored and displayed on the platform and in the BOSCH eBike Flow app.

7.3.19.4 Adjusting the level of assistance

▶ Configure the level of assistance in the **<Settings>** menu option in the BOSCH eBike Flow app. Follow the instructions on the smartphone screen to do so.

⇨ The changed mode retains the position, name and colour on all on-board computers and operating elements.

You will find more information in the BOSCH eBike Flow app operating instructions.

7.3.19.5 Setting up the eBike Lock function

✓ Pairing the System Controller control panel with a smartphone (see Section 7.3.19.2).

✓ A user account has been added.

✓ No update is being installed on the pedelec.

✓ The pedelec is linked to the smartphone via Bluetooth®.

✓ The pedelec is stationary.

✓ The smartphone is connected to the Internet.

✓ The battery is sufficiently charged.

✓ The charging cable is not connected.

▶ Configure the eBike Lock function in the <Settings> menu option in the BOSCH eBike Flow app. Follow the instructions on the smartphone screen to do so.

⇨ The eBike Lock function is set up.

7.3.19.6 Deactivating the eBike Lock function

Always deactivate the eBike Lock function in the following cases:

- If a third party is being given temporary or permanent access to the pedelec
- The pedelec is taken in for servicing
- If the pedelec is being sold. The smartphone is in close proximity.

✓ Bluetooth® is enabled on the smartphone.

✓ The Bosch eBike Flow app is active in the background. The BOSCH eBike Flow app cannot be opened.

▶ Deactivate the eBike Lock function in the <Settings> menu option in the BOSCH eBike Flow app. Follow the instructions on the smartphone screen to do so.

⇨ The eBike Lock function is deactivated.

If the key is not verified on the smartphone immediately, the battery level indicator (control panel) and the level of assistance indicator (control panel) on the pedelec will flash white to indicate a search is being performed for the key.

If the key is found, the battery level indicator (control panel) will flash white. The last configured level of assistance will be displayed. If the key cannot be found on the smartphone, the pedelec drive system switches off. The indicators on the control panel go off.

As the smartphone is only used as a contactless key to switch on the pedelec, the battery and control panel can still be used on another, unblocked pedelec.

7.3.19.7 Updating the software

Software updates must be launched manually in the BOSCH eBike Flow app. The BOSCH eBike Flow app manages the software updates.

1 Open **Settings > My eBike > eBike update > Search for eBike update** in the BOSCH eBike Flow app.

⇨ Any available software updates will be indicated on the home screen in the BOSCH eBike Flow app.

2 Confirm download.

⇨ The new software is downloaded to the smartphone.

⇨ The smartphone then automatically transfers the files to the pedelec via Bluetooth. The process takes about 20-30 minutes. The pedelec can be used as normal during this time.

⇨ The battery level indicator (control panel) on the pedelec will flash green during updates to show how the update is progressing.
Read the software update card on the home screen in BOSCH eBike Flow app for more details and current progress.

⇨ When the transfer is complete, the **<Install now>** button will be displayed in the BOSCH eBike Flow app.

3 Click on the **<Install now>** button in the BOSCH eBike Flow app to confirm. The pedelec must be stationary during installation. You must not remove any components, such as the battery, from the electric drive system.

⇨ During installation, the pedelec will restart at least once and the connection with the BOSCH eBike Flow app will be lost as a result.
Once connection is established, current progress will be displayed on the software update card on the home screen.

⇨ Installation is complete when the LEDs stop flashing.

7.3.19.8 Deleting the Bosch eBike Flow app from the smartphone

Delete the BOSCH eBike Flow app if you sell the pedelec.

7.4 Accessories

The following accessories are approved for i:SY pedelecs.

7.4.1 Child seat

⚠WARNING Crash caused by attachment to non-load-bearing components

Pannier racks with a maximum load capacity under 27 kg and the down tube are unsuitable for mounting child seats and may break. Such an incorrect position may cause a crash with serious injuries for the pedelec rider or child.

▶ Never attach a child seat to the saddle, handlebars or down tube.

Carbon frames are unsuitable for child seats and may break. Such an incorrect position may cause a crash with serious injuries for the pedelec rider or child.

▶ Never fasten a child seat to a carbon frame or a carbon component.

⚠CAUTION Crash caused by improper handling

When using child seats, the pedelec's handling characteristics and stability change considerably. This can cause a loss of control, a crash and injuries.

▶ You should practice how to use the child seat safely before using the pedelec in public spaces.

⚠CAUTION Risk of crushing due to exposed springs

The child may crush their fingers on exposed springs or open mechanical parts attached to the saddle or the seat post.

▶ Never install saddles with exposed springs if a child seat is being used.

▶ Only fit suspension seat posts with a protected mechanism springs if you use a child seat.

Notice

▶ Observe the legal regulations on the use of child seats.

▶ Observe the operating and safety instructions for the child seat system.

▶ Never exceed the maximum permitted total weight.

The specialist dealer will advise you on which child seat system is suitable for the child and the pedelec.

The specialist dealer must install the child seat the first time to ensure that it is safely fitted.

When installing a child seat, it must be ensured that:

- the seat and the seat fastening are suitable for the pedelec
- all components are installed and securely fastened
- shift cables, brake cables, hydraulic and electrical cables are adjusted as necessary
- the pedelec rider has optimum freedom of movement
- the maximum permitted total weight of the pedelec is observed.

The specialist dealer will provide instruction on how to handle the pedelec and the child seat.

7.4.1.1 THULE, Yepp 2 Maxi Rack Mount

Figure 119: THULE, Yepp 2 Maxi Rack Mount

Adjustable, padded 5-point safety harness for secure, personalized fitting and maximum comfort, made of water-repellent materials and with an integrated lock for securing to the pannier rack.

Compatible with the i:SY MONKEYLOAD ready Pannier Rack for model year 2022 and later.

- Maximum weight of child: 22 kg
- Product weight: about 3.5 kg

Article number	Description
5021310	THULE, Yepp 2 Maxi Rack Mount

7.4.1.2 Suspension seat post protective covers

Figure 120: Suspension seat post protective covers

Protects the suspension seat post spring mechanism against dirt and prevents children's hands from becoming trapped when using a child seat.

Article number	Description
6032506	by.schulz (ST)
6032507	by.schulz (LT)
6032371	SR SUNTOUR neoprene cuff

7.4.2 Trailers

⚠WARNING Crash caused by attachment to non-load-bearing components

Carbon frames are unsuitable for use with trailer adapters and may break. Such an incorrect position may cause a crash with serious injuries for the pedelec rider.

▶ Never use a trailer adapter on a carbon frame.

⚠CAUTION Crash caused by brake failure

The braking distance may be longer if the trailer is carrying excessive load. The long braking distance can cause a crash or an accident and injuries.

Notice

▶ The operating and safety instructions for the trailer system must be observed.

▶ Observe the statutory regulations on the use of bicycle trailers.

▶ Only use type-approved coupling systems.

A pedelec which is approved for towing a trailer will bear an appropriate adhesive label. You may only use trailers with a tongue load and weight which do not exceed the permitted values.

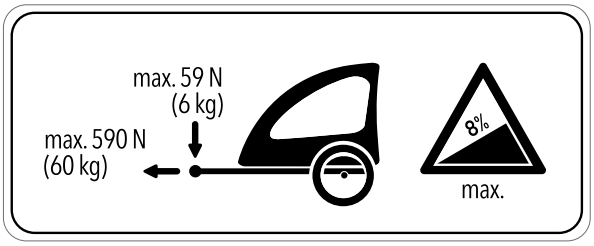

Figure 121: Trailer sign

7.4.2.1 i:SY Trailer Adapter

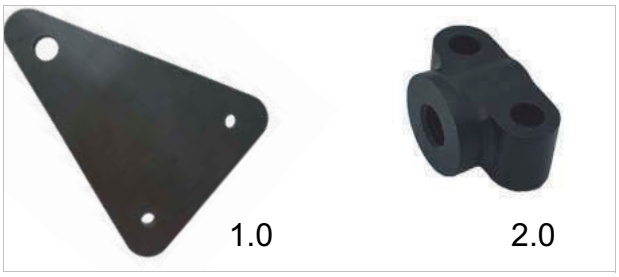

Figure 122: i:SY Trailer Adapter 1.0 and 2.0

There are suitable trailer adapters for the frames to fasten a trailer to an i:SY pedelec.

The adapter provides level attachment for the trailer and is compatible with all standard couplings for mounting to the axle. The adapter comes in an assembly kit. We recommend asking your i:SY specialist dealer to assemble it.

The max. tongue load is 6 kg and the max. tensile load is 60 kg.

Article number	Description
23000176	i:SY Trailer Adapter 1.0
23000177	i:SY Trailer Adapter 2.0

7.4.3 MonkeyLoad system

i:SY pannier racks are MonkeyLoad ready. This means all MonkeyLoad system components can be used on the pannier rack. Other systems such as I-Rack, racktime or MIK are not compatible.

▶ Never exceed the indicated maximum load capacity of 10 kg for MonkeyLoad system components when using them.

▶ Use a paint protection film when attaching panniers. This will reduce abrasion on paint and wear on components.

There are two holding fixtures beneath MonkeyLoad bags and baskets which fit into the pannier rack fastening points precisely.

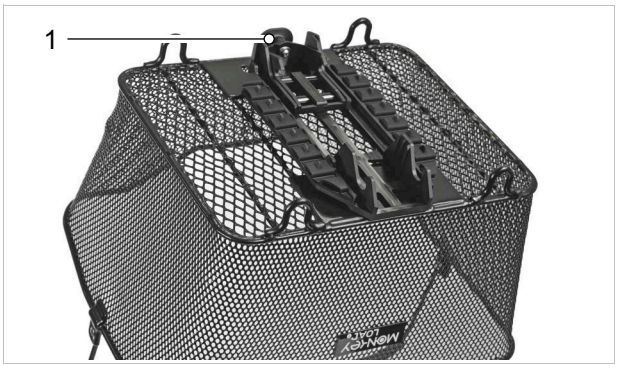

Figure 123: Basket with MonkeyLoad adapter plate and pull knob (1)

7.4.3.1 Attaching MonkeyLoad system components

1 Place MonkeyLoad system component in the correct position on the pannier rack.

2 Apply a little pressure to the MonkeyLoad system components.

⇨ The system component is now attached to the pannier rack.

3 If the system component is to remain on the pedelec for a longer period of time, lock the MonkeyLoad system with the key.

4 Remove the key.

7.4.3.2 Detaching MonkeyLoad system components

1 Open locked MonkeyLoad system with the key.

2 Pull on the pull knob gently.

3 The system component is unlocked.

⇨ The system component can be removed from the pannier rack.

Article number	Description
5121602	MonkeyLoad adapter plate
23000035	i:SY Pannier Rack Trunk Bag
i:SY Watertight Pannier, large	
23000064	Black
23000168	Neon yellow

Article number	Description
5020319	MonkeyLoad lock
23000127	i:SY Aluminium Crosswise Pannier Rack Basket
23000128	i:SY Aluminium Lengthwise Pannier Rack Basket
23000126	i:SY Aluminium Front Basket
23000034	i:SY Foldable Basket

Article number	Description
23000150	i:SY Clipper
23000178	i:SY Front Carrier 2.0
23000105	i:SY Skyfly pannier rack (1)
23000171	i:SY pannier rack ML (2)
5028493	Bordo lock holder

Article number	Description
5031841	Bordo lock, combination lock
5031840	Bordo lock, lock
5028502	MonkeyLink Twist Bottle
5028491	MonkeyLink Bottle Holder
5028492	MonkeyLink Anything Twist Bottle Holder
5028481	MonkeyLink Magnetic Holder

7.4.4 Front baskets

7.4.4.1 i:SY, KLICKfix Front Carrier

Figure 124: i:SY, KLICKfix Front Carrier

- Material: steel
- Colour: black
- Dimensions: 18 x 26 x 20 cm (W x H x D)
- Max. load: 12 kg (carrier)/7 kg (KLICKfix system components)

Article number	Description
23000000	i:SY, KLICKfix Front Carrier

7.4.4.2 i:SY, 2.0 Front Carrier

Figure 125: i:SY, 2.0 Front Carrier

Suitable for the SKYFLY und P12 models. With integrated MonkeyLoad-T and KLICKfix® mount.

- Material: Aluminium
- Max. load: 15 kg (carrier) | 10 kg MonkeyLoad-T | 7 kg (KLICKfix)

Article number	Description
23000178	i:SY, 2.0 Front Carrier

7.4.4.3 i:SY, MIK Front Carrier

Figure 126: i:SY, MIK Front Carrier

- Compatible with the BASIL Buddy dog basket
- MIK system integrated
- Can be attached with a KLICKfix adapter
- Colour: black
- Dimensions: 28 x 20 x 16 cm (W x H x D)
- Max. load: 12 kg

Article number	Description
23000001	i:SY, MIK Front Carrier

7.4.4.4 KLICKfix Caddy handlebar adapter

Figure 127: KLICKfix Caddy handlebar adapter

upgrades the i:SY MIK Front Carrier so that it can also hold KLICKfix® baskets and bags.

Article number	Description
5020544	KLICKfix Caddy handlebar adapter

7.4.4.5 i:SY, MAXI Front Carrier

Figure 128: i:SY, MAXI Front Carrier

- Material: Steel
- Colour: black
- Dimensions: 45 x 16 x 29 cm (W x H x D)
- Max. load: 12 kg

Article number	Description
23000002	i:SY, MAXI Front Carrier

0.0.0.2 i:SY, Lowrider

Figure 129: i:SY, Lowrider

Attached to the fork; suitable for the watertight i:SY pannier rack bags

- Material: Aluminium
- Colour: black
- Weight: about 580 g
- Max. load: 4 kg per side

Article number	Description
23000003	i:SY, Lowrider

7.4.5 Panniers and cargo boxes

7.4.5.1 BASIL, Buddy Dog Basket by i:SY

Figure 130: BASIL, Buddy Dog Basket

Dog basket for MIK Front Carrier

- Material: polypropylene
- Weight: about 1600 g
- Capacity: about 32 l
- Capacity: 32 litres; max. load: 9 kg

Article number	Description
23000156	Chestnut brown
23000050	Midnight blue

7.4.5.2 Dog basket

Figure 131: i:SY Clipper Dog Equipment

Retrofit kit for the i:SY Clipper, consisting of a cushion, leash harness and wire dome. Suitable for dogs up to 8 kg.

Article number	Description
23000152	i:SY Clipper Dog Equipment
5020932	Wire dome for the Buddy dog basket

7.4.5.3 i:SY, front shopping basket

Figure 132: i:SY, front shopping basket

Shopping basked for KLICKfix Front Carrier

- Large, oval bike basket with carrying handle, including KLICKfix adapter plate
- Dimensions: 27 × 27 × 36 cm
- Capacity: 16 litres
- Max. load: 7 kg

Article number	Description
23000053	i:SY, Front Shopping Basket

7.4.5.4 i:SY, watertight pannier, small

Figure 133: i:SY, front shopping basket

Shopping basked for KLICKfix Front Carrier

- Large, oval bike basket with carrying handle, including KLICKfix adapter plate
- Dimensions: 27 × 27 × 36 cm
- Capacity: 16 litres
- Max. load: 7 kg

Article number	Description
23000053	i:SY, Front Shopping Basket

7.4.5.5 Tension belt

Figure 134: i:SY, tension belt

The tension belt is suitable for pannier racks model year 2022 and later The hooks also feature integrated safety clips so that belt remains firmly attached even when riding over potholes.

Article number	Description
23000157	i:SY, tension belt

7.4.6 Saddle

7.4.6.1 Leather saddle

Figure 135: i:SY real leather saddle

- Material: Leather
- Weight: about 430 g

Description	Article number
Real leather saddle	23000129

7.4.6.2 ZECURE-saddle

Figure 136: ZECURE (S, M and L) saddle

Description	Article number
ZECURE, hydro foam, size S Width: 16.3 cm	061-30793
ZECURE, hydro foam, size M Width: 19.3 cm	061-30794
ZECURE, hydro foam, size L Width: 22.0 cm	061-30795
ZECURE, Comfort, size XL Width: 22.0 cm, with indent for coccyx	061-30799

7.4.6.3 Saddle protection

Figure 137: i:SY Feel Good saddle cover

If you park your bike outdoors, you'll be all too familiar with a wet saddle and wet trouser seat. This waterproof saddle cover with heat-sealed seams provides a remedy. An integrated adjustment system adapts the cover to the different i:SY saddle sizes.

- Material: Oxford Cloth 600D
- Weight: approx. 40 g

Description	Article number
i:SY Feel Good saddle cover	061-30793

7.4.7 Seat post

Figure 138: BY.SCHULZ Parallelogram suspension seat post G.2

Description	Article number
BY.SCHULZ, G.2 ST	
Body weight: 60 … 85 kg	6032487
Body weight: 80 … 105 kg	6032509
Body weight: 100 … 130 kg	6032488
Body weight: 125 … 150 kg	6032489
BY.SCHULZ, G.2 LT	
Body weight: 60 … 85 kg	23000090
Body weight: 80 … 105 kg	23000093
Body weight: 100 … 130 kg	23000094
Body weight: 125 … 150 kg	23000095
SR SUNTOUR NCX	
Reducing sleeve, 31.6 mm	6032377

7.4.8 Saddle tensioner

Figure 139: i:SY saddle tensioner

Adjust the saddle height with little effort with no need for tools.

- Material: Aluminium
- Weight: approx. 65 g

Description	Article number
i:SY SPECIAL SADDLE TENSIONER	23000092

7.4.9 Adjustable stem

Figure 140: i:SY adjustable stem

- Material: Aluminium
- Weight: approx. 380 g
- Length: 90 mm

Description	Article number
i:SY adjustable stem	23000080

7.4.10 Handlebars

Figure 141: i:SY Comfort handlebars

- Material: Aluminium
- Weight: approx. 320 g
- Offset: 40°

Description	Article number
i:SY Comfort handlebars	23000145

7.4.11 Leather handles

Figure 142: i:SY leather handles

Ergonomically shaped, high-quality sewn real leather handles.

- Material: Leather
- Weight: 190 g

Description	Article number
i:SY leather handles	23000130

7.4.12 Folding pedals

Figure 143: i:SY folding pedals

Metal-reinforced, tool-free folding mechanism. With an enlarged tread surface, lined with high-grade sandpaper for an optimum grip, even when you're wearing shoes with smooth soles.

- Material: Aluminium
- Weight: 540 g

Description	Article number
i:SY Folding Pedals	23000115

7.4.13 Protective covers

Description	Article number
i:SY motor protective cover	23000106
i:SY battery protective cover 400 and 500 WH	23000107
i:SY battery protective cover 545 Wh	23000169
i:SY contacts protective cover	23000108
Transport protection set	23000170

7.4.14 Two-leg stand

Figure 144: ATRAN VELO two-leg stand

Sturdy two-leg stand for the i:SY. We recommend using a handlebar damper.

WARNING **Crash caused by tipping over**

A pedelec parked on a two-leg stand can topple over if a child who is strapped into a child seat moves around. This may cause a crash with serious injuries for the child.

▶ If you are using a child seat, keep an eye on the child at all times, even when the two-leg stand is extended.

Not suitable for models with Schwalbe Super Moto X tyres, i:SY Comfort variants from 2024 and later, i:SY Cargo, i:SY P12 and i:SY SKYFLY.

Description	Article number
ATRAN VELO two-leg stand	23000146

7.4.15 Lock chain

Figure 145: i:SY lock chain

- Length: 130 cm
- Weight: about 1.1 Kg

Description	Article number
i:SY Lock Chain	23000116

7.4.16 Adapter

Figure 146: i:SY Adapter

Fitted to the head tube, this adapter can hold numerous accessory items.

Description	Article number
Black	23000158
Silver	23000004

7.4.17 Rear mirror

Figure 147: i:SY rear mirror

Description	Article number
Rear mirror	23000132

7.4.18 ROHLOFF gear hub tool

ROHLOFF recommends taking suitable precautions, especially when touring in countries or regions where a poor supply of spare parts or tools is to be expected. ROHLOFF has compiled a list of tools and other small items you should take with you on bike tours.

Tools for touring within the EU

- Hex key, 2 mm (bayonet locks/cable drum screws)
- Hex key, 3 mm (oil drain screw)
- Hex key, 5 mm (attachment screw for chain tensioner and torque support)
- Ring/open-end spanner, 8 mm (to rotate the gear shift shaft)
- Chain oil and grease
- Torx® TX 20 (all other screws for the ROHLOFF Speedhub 500/14)

Additional accessories for touring worldwide

- Oil change set
- Sprocket remover
- Spare chain and spare sprocket
- Spare spokes
- Spare gear cables
- Internal gear shift control: Spare shift cable
- Shift cable easy set
- Axle ring

▶ Contact specialist dealer to purchase tools

7.5 Personal protective equipment and accessories for road safety

Seeing and being seen is crucial in road traffic. The following requirements must be met for riding a pedelec safely on public roads.

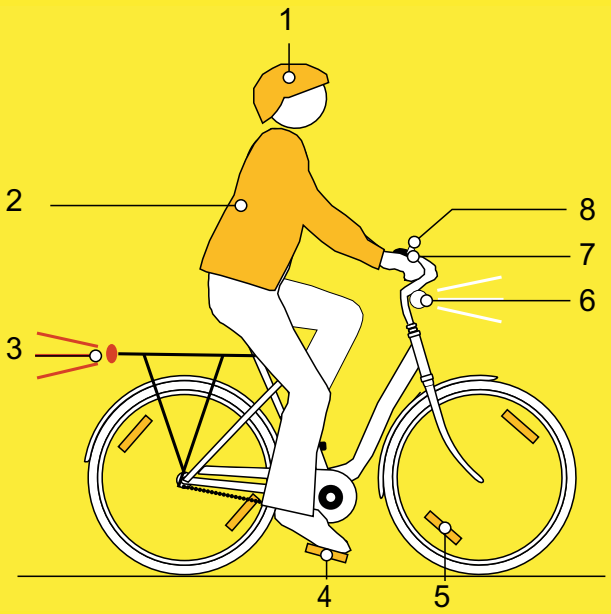

Figure 148: Road safety

1 The **helmet** must have a reflective strip or a light in a clearly visible colour.

2 **Cycle clothing** is essential at all times of year. Clothing should be retroreflective or as light as possible. Fluorescent materials are also suitable. High-visibility jackets and straps on your upper body ensure even greater safety. Never wear a skirt. Always wear trousers which reach down to your ankles instead.

3 The **large red reflector** with a “Z” registration mark and the **red rear light** must be clean. The rear light is attached high enough so that cars can see it (minimum height 25 cm). The rear light must work.

4 The two **reflectors on the two non-slip pedals** must be clean.

5 The **yellow spoke reflectors** on both wheels or the **white, fluorescent surface** on both wheels must be clean.

6 The **white front light** must work and must be positioned so that it does not dazzle other road users. The white front light and the **white reflector** must be clean at all times.

7 The **two separate brakes** on the pedelec must work at all times.

8 The **clearly audible bell** must be fitted and must work.

7.6 Before each ride

▶ Check pedelec before each ride; see Section 6.1.

Checklist before each ride		
☐	Check everything is sufficiently clean.	See Section 6.2
☐	Check safety guards.	See Section 6.1.1
☐	Check battery to ensure it is firmly in place.	See Section 6.16.2
☐	Check lights.	See Section 6.1.13
☐	Check brake.	See Section 6.1.14
☐	Check suspension seat post.	See Section 6.1.9
☐	Check pannier rack.	See Section 6.1.5
☐	Check bell.	See Section 6.1.10
☐	Check handles.	See Section 6.1.11
☐	Check rear frame damper.	See Section 6.1.4
☐	Check frame.	See Section 6.1.2
☐	Check wheel concentricity.	See Section 6.1.7
☐	Check quick releases.	See Section 6.1.8
☐	Check guards.	See Section 6.1.6
☐	Check USB cover.	See Section 6.1.12

▶ Be alert to any unusual noises, vibrations or odours while riding. Watch out for any unusual responses or behaviour when braking, pedalling or steering. This indicates material fatigue.

✓ Take pedelec out of service if there are any deviations from the “Before each ride” checklist or any unusual behaviour. Contact specialist dealer.

7.7 Using the battery

✓ Switch off the battery and the drive system before removing or inserting the battery.

7.7.1 Inserting the battery

✓ The key is inserted in the lock.

✓ The lock is unlocked.

1 Place the battery into the lower mount with the contacts facing the front (1).

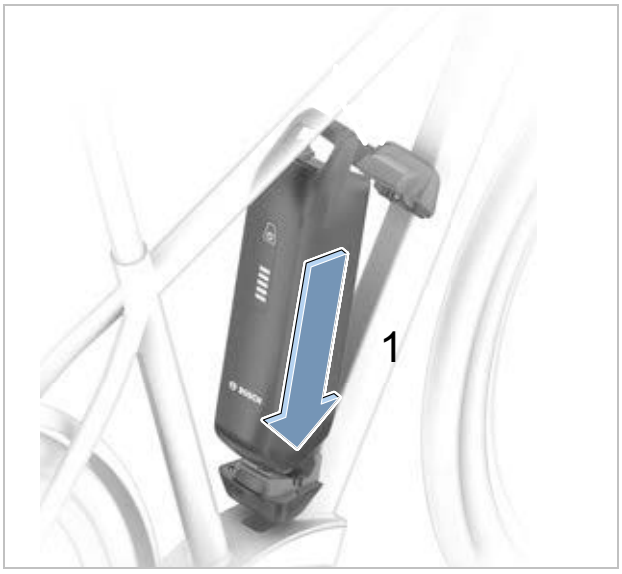

Figure 149: Insert the PowerPack battery

2 Flip the battery upwards so that the battery is held by the retainer guard (2).

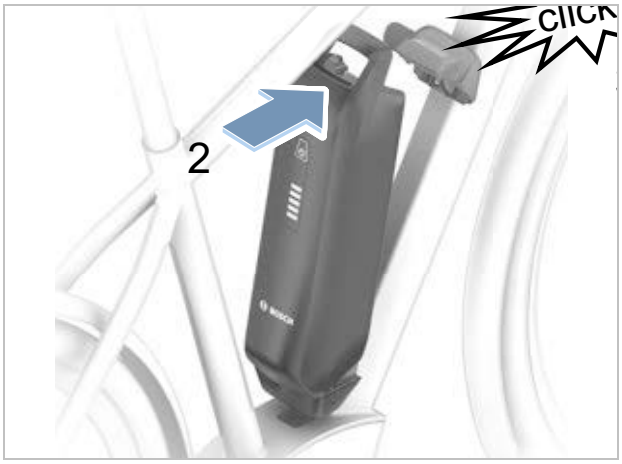

Figure 150: Close the PowerPack battery upwards

3 Keep the lock open with the key.

4 Push the battery upwards (3).

⇨ The battery can be heard locking into place.

5 Check battery to ensure it is firmly in place on all sides.

6 Lock the battery with the battery key; otherwise, the battery may fall out of the mount when you open (4).

7 Remove the battery key from the battery lock.

8 Check the battery to ensure it is firmly in place before each ride.

7.7.2 Removing the battery

1 Open battery lock with battery key (1).

⇨ The battery is released and falls into the retainer guard (2).

2 Hold the battery in your hand from below. Use the other hand to push on the retainer guard from above (3).

⇨ The battery is released and falls into the hand (4).

3 Remove the battery from the frame.

4 Remove the battery key from the battery lock.

7.7.3 Charging the battery

The battery can remain on the pedelec or can be removed for charging. Interrupting the charging process does not damage the battery. The battery is fitted with a temperature monitoring system which only allows charging within a temperature range between 0 °C and 40 °C.

✓ The ambient temperature during the charging process lies within the range between 0 °C to 40 °C.

1 Remove the cable connection cover if necessary.

2 Connect the mains plug of the charger to a normal domestic, grounded socket.

Connection data	230 V, 50 Hz

Notice

▶ Check that mains voltage! The power source voltage must match the voltage indicated on the charger nameplate. Chargers labelled 230 V may be operated at 220 V.

3 Connect the charging cable to the battery's charging port.

⇨ The charging process starts automatically.

⇨ The battery level indicator shows the charge level during charging. When the drive system is switched on, the *on-board computer* displays the charging process.

Notice

If an error occurs during the charging process, a system message is displayed.

▶ Remove the charger and battery from operation immediately and follow the instructions.

⇨ The charging process is complete when the LEDs on the battery level indicator go out.

4 Once charging is complete, disconnect the battery from the charger.

5 Disconnect the charger from the mains.

7.8 Straightening the quickly adjustable stem

Only applies to pedelecs with this equipment

1 Open stem clamping lever.

2 Use your finger to lift the unlocking bolt.

Figure 151: Pressing the unlocking bolt upwards

3 Pull handlebars into the highest possible position.

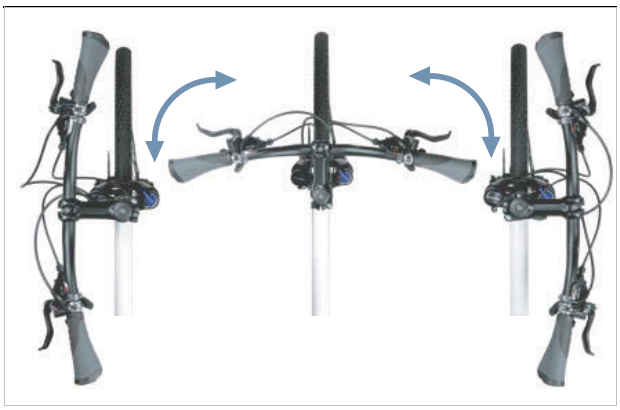

Figure 152: Turn handlebars.

4 Turn handlebars by 90° so that they are straight.

5 Place handlebars at required height.

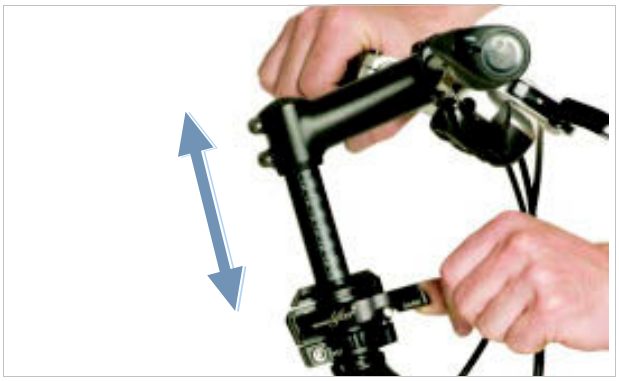

Figure 153: Adjusting the height

6 Close stem clamping lever.

7.9 Lowering the pedals

⚠ CAUTION

Crushing fingers in the pedal folding latch

The pedal folding latch uses a high clamping force. There is a risk of crushing fingers in the flap.

▶ Never allow the pedal folding mount to snap shut uncontrollably.

▶ Be careful where you position your fingers when opening and closing.

1 Use two fingers to pull the pedal folding latch (1) downwards and hold in position.

⇨ The folding system is unlocked.

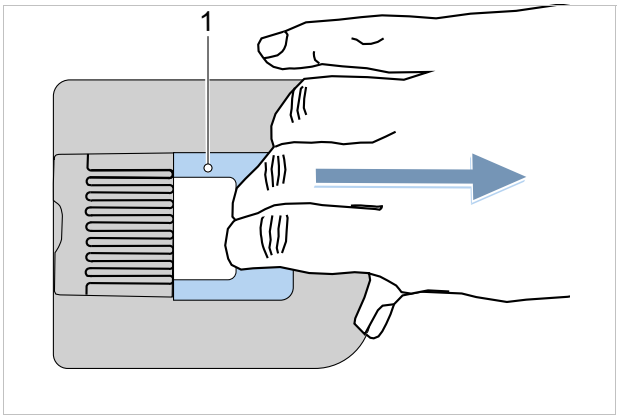

Figure 154: Pulling the pedal folding latch (1) downwards

2 Fold the pedal down.

3 Release your grip to carefully allow the pedal folding latch to return to its original position.

⇨ The pedal is extended.

7.10 Using the pannier rack

⚠ CAUTION

Crash caused by loaded pannier rack

The pedelec is handled differently with a loaded *pannier rack*, in particular when the rider needs to steer and brake. This can lead to a loss of control This may cause a crash with injuries.

- ▶ You should practice how to use a loaded *pannier rack* safely before using the pedelec in public spaces.

Crushing fingers in the spring flap

The spring flap on the *pannier rack* uses a high clamping force. There is a risk of crushing fingers in the flap.

- ▶ Never allow the spring flap to snap shut in an uncontrolled manner.
- ▶ Be careful where you position your fingers when closing the spring flap.

Crash caused by unsecured baggage

Loose or unsecured objects on the *pannier rack*, e.g. belts, may become caught in the rear wheel This may cause a crash with injuries.
Objects which are fastened to the pannier rack may cover the *reflectors* and the *riding light*. Other users may not see the pedelec on public roads as a result This may cause a crash with injuries.

- ▶ Secure any objects which are attached to the *pannier rack* firmly.
- ▶ Objects fastened to the *pannier rack* must never cover the *reflectors*, the *headlight* or the *rear light*.

- ▶ Distribute the baggage as evenly as possible between the left- and right-hand side.
- ▶ We recommend using panniers and baggage baskets.

Figure 155: The maximum load bearing (1) capacity is indicated on the pannier rack

- ▶ Pack the pedelec to its *maximum permitted total weight* (PTW) only.
- ▶ Pack the pedelec to the pannier rack's (1) maximum load capacity only.
- ▶ Use the original pannier rack only.

7.11 Raising the kickstand

- ▶ Use your foot to raise kickstand completely before setting off.

7.12 Using the saddle

- ▶ Do not wear studded jeans as these can damage the saddle covering.
- ▶ Wear dark clothes for your first few rides as new leather saddles can stain clothing.

Riders often experience pain in the sitting bones, especially beginners or at the start of the season, after a longer break. The periosteum around the sitting bones is irritated as it is unaccustomed to the chafing. To reduce chafing:

- ▶ Wear cycling shorts with shock-absorbing seat padding.
- ▶ Use a chamois cream or ointment.
- ⇨ The sensation of pain is reduced after five to six rides, although it may increase again after two to three weeks of riding.

7.12.1 Using the leather saddle

Sunlight and UV -light tarnish the colour and cause the leather to dry out and fade.

▶ Park pedelec in the shade.

▶ Always use a saddle cover.

Moisture may cause the leather to detach from material beneath and mould may form.

▶ If the leather saddle gets wet, dry saddle completely.

▶ Always use a saddle cover.

7.13 Using the pedals

▶ The ball of the foot is placed on the pedal when riding and pedalling.

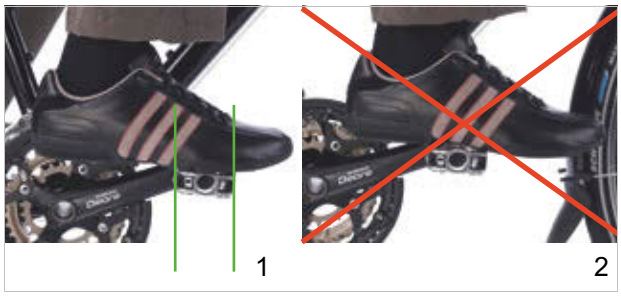

Figure 156: Correct (1) and incorrect (2) foot position on the pedal

7.14 Using the bell

1 Press the bell button downwards.

2 Let button spring back.

7.15 Using the handlebars

▶ Wear heavily padded cycling gloves.

⇨ This helps protect sensitive areas of your palms.

▶ Vary your grip position continuously while riding.

⇨ This prevents overstraining and fatigue in your hands.

7.15.1 Using multi-position handlebars

Only applies to pedelecs with this equipment

Multi-position handlebars are ideal for dynamic riding. The contoured ends of the handlebars, also known as horn handlebars, provide a variety of grip options. Changing muscle groups reduces strain on the hands, arms and back during longer rides.

▶ Vary your grip position continuously while riding.

⇨ This prevents overstraining and fatigue in your hands.

Figure 157: Grip positions on the multi-position handlebars

Grip position 1

The top grip position is suitable for riding slowly.

▶ Straighten your upper body without tensioning in this position.

Grip position 2 and 3

The middle and bottom grip position is suitable for fast rides and riding on inclines.

▶ In the middle position, hold the arm and wrist upright and relax tension.

▶ In the bottom position, place your upper body slightly lower. Keep your fingers close to the brake handle ready for use.

7.15.2 Using bar ends

Only applies to pedelecs with this equipment

Bar ends can be added to normal handlebars.

Adjustable bar ends feature a ball joint, which you can use to choose the optimum position as required.

▶ Adjust bar ends correctly. To do so, your hand, elbow and shoulder must be in line with one another when the hand takes hold of the bar ends.

▶ During the ride, keep varying your grip position between a flat (1) and upright (2) hand position.

⇨ This prevents overstraining, fatigue and numbness in your hands and fingers.

Figure 158: Grip positions on a bar end

7.15.3 Using leather handles

Only applies to pedelecs with this equipment

Sweat and grease from the skin are two of the greatest enemies of leather. They penetrate the surface of leather and cause it to disintegrate more quickly, meaning the leather can soften and abrade.

▶ Wear gloves.

Sunlight and UV -light damage the colour and can cause the leather to dry out and fade.

▶ Park pedelec in the shade.

Moisture may cause the leather to detach from material beneath and mould may form.

▶ If the leather handles get wet, dry handles completely.

7.16 Using the electric drive system

7.16.1 Switching on the electric drive system

⚠ CAUTION

Crash caused by failure to prepare to brake.

When it is switched on, the drive system can be activated by applying force to the pedals. There is a risk of a crash if the drive is activated unintentionally and the brake is not reached.

▶ Never switch on the electric drive system, or switch it off immediately, if the brake cannot be reached safely and reliably.

✓ A sufficiently charged battery has been inserted into the pedelec.

✓ The battery is firmly positioned and locked. The battery key has been removed.

✓ The speed sensor is connected correctly.

▶ Press the **on-off button (on-board computer)** briefly (<3 seconds).

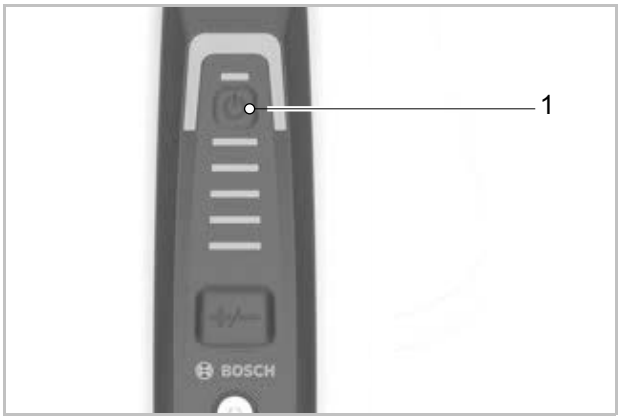

Figure 159: Position of the on-off button on the System Controller

⇨ After the start animation, the battery level is displayed on the battery level indicator (control panel) and the configured level of assistance is shown in colour on the System Controller level of assistance indicator.

⇨ The pedelec is ready to ride.

If the drive system is switched on, the drive is activated as soon as the pedals are moved with sufficient force (except if the selected level of assistance of assistance is OFF). The motor power is based on the level of assistance of assistance selected on the control panel.

7.16.1.1 Activating the eBike Lock function (optional)

✓ The configured smartphone is switched on.

✓ The smartphone battery is charged sufficiently.

✓ The smartphone is directly next to the control panel.

⇨ The eBike Lock function is deactivated automatically.

⇨ The drive unit emits two acoustic signals.

7.16.2 Switching off the electric drive system

As soon as the rider stops pushing the pedals in normal mode or reaches a speed of 25 km/h, the drive system switches off the assistance system. The assistance system starts up again when you push the pedals and your speed is less than 25 km/h.

There is also the option of switching the drive system off manually on the control panel.

▶ Press the **on-off button (control panel)** briefly (<3 seconds).

⇨ The battery level indicator (control panel) and the System Controller level of assistance indicator turn off.

⇨ The electric drive system will switch off automatically ten minutes after the last command and no power has been required from the electric drive system.

⇨ The pedelec is switched off.

7.17 Using the control panels

Notice

▶ Never use the control panels as a handle. If the control panels are used to lift the pedelec, components can become irreparably damaged.

7.17.1 Set the level of assistance

Mini-Remote

▶ Press the **plus button** briefly (<1 second).

⇨ The assistance is increased.

▶ Press the **minus button** briefly (<1 second).

⇨ The assistance is reduced.

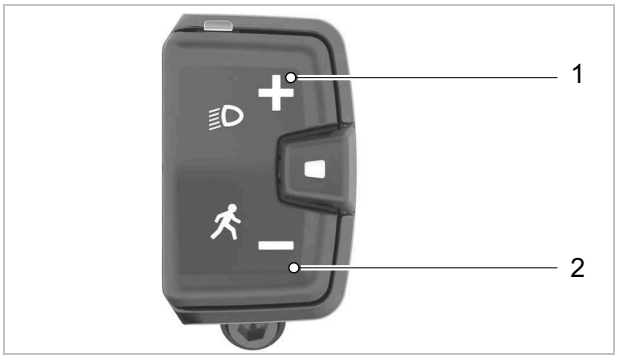

Figure 160: Position of the plus (1) and minus (2) buttons

System Controller

▶ Press the **mode button** briefly (<1 second).

⇨ The assistance is increased.

▶ Press the **mode button** longer than 1 second.

⇨ The assistance is reduced.

Figure 161: Position of the mode button

7.17.2 Using the riding light

⇨ The drive system needs to be already switched on to turn on the *riding light*.

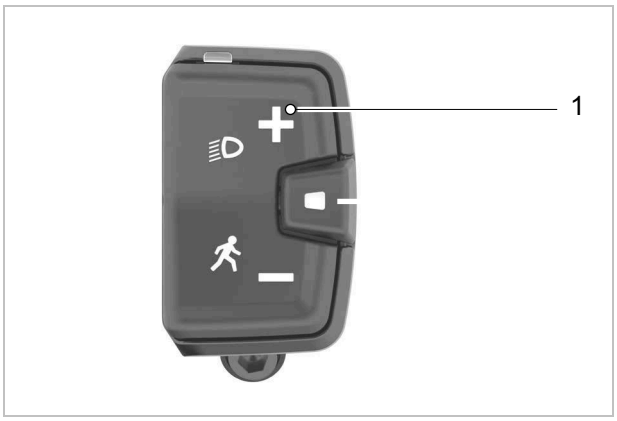

Figure 162: Position of light butto

▶ Press the **light button** for more than 1 second.

⇨ The front light and the rear light are switched on at the same time.

7.17.3 Using the push assist system

⚠ CAUTION

Injury from pedals or wheels

The pedals and the drive wheel turn when the push assist system is used. There is a risk of injury if the pedelec wheels are not in contact with the ground when the push assist system is used (e.g. when carrying the pedelec up stairs or when placing it on a bicycle rack).

▶ Only use the push assist mode when pushing the pedelec.

▶ You must steer the pedelec securely with both hands when using push assist.

▶ Allow for enough freedom of movement for the pedals.

✓ We recommend using first gear for cycling uphill to protect the drive.

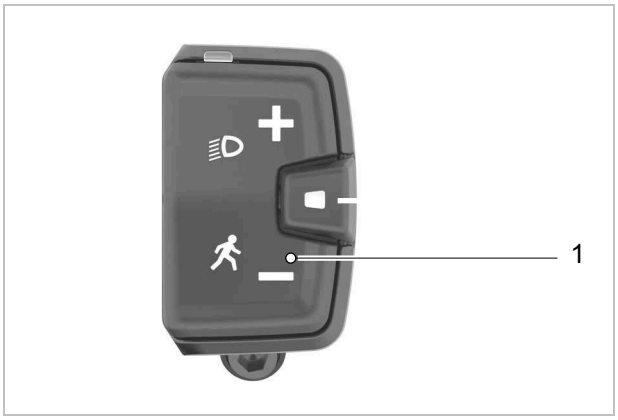

Figure 163: Position of push assist button (1)

1 Press the **push assist button** for longer than 1 seconds. Hold down the button.

⇨ The battery level indicator (control panel) goes out and a white running light in the direction of travel indicates push assist is ready.

2 One of the following actions must be taken within the next 10 seconds:

▶ Push pedelec forwards.

▶ Push pedelec backwards.

▶ Make a weaving movement with the pedelec.

⇨ The push assist is activated. The continuous white bars change colour to ice blue.

⇨ The motor starts to push.

3 Release the **push assist button** on the control panel to switch off motor assistance.

4 Push the **push assist button** within 10 seconds to reactivate motor assistance.

5 If motor assistance deactivates within 10 seconds, the push assist function switches off automatically.

Push assist will also switch off automatically if

- the rear wheel blocks
- speed bumps cannot be ridden over
- a part of the body is blocking the bicycle crank
- an obstacle turns the crank further
- the rider pedals
- the **plus button** or **on-off button** is pressed.

7.18 Using the brake

WARNING **Crash caused by brake failure**

Oil or lubricant on the brake disc in a disc brake or on the rim of a rim brake can cause the brake to fail completely. This may cause a crash with serious injuries.

- ▶ Never allow oil or lubricant to come into contact with the brake disc or brake linings or on the rim of a rim brake.
- ▶ If the brake linings have come into contact with oil or lubricant, contact specialist dealer to have the components cleaned or replaced.

If the brakes are applied continuously for a long time (e.g. while riding downhill for a long time), the fluid in the brake system may heat up. This may create a vapour bubble. This will cause air bubbles or water contained in the brake system to expand. This may suddenly make the lever travel wider. This may cause a crash with serious injuries.

- ▶ Release the brake regularly when riding downhill for a longer period of time.
- ▶ Use the front and rear wheel brakes alternately.

7.18.1 Using the handbrake

Only applies to pedelecs with this equipment

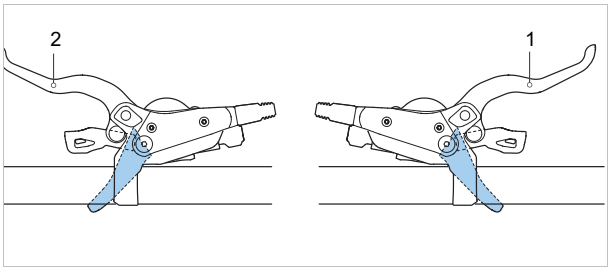

Figure 164: Handbrake, front (2) and rear (1) – SHIMANO brake used as an example

- ▶ In order to achieve optimum braking results, do not pedal while braking.
- ▶ Pull the left *handbrake* to apply the *front wheel brake*.
- ▶ Pull the right *handbrake* to apply the *rear wheel brake*.

7.18.2 Using the back-pedal brake

Only applies to pedelecs with this equipment

1. Move pedals a little beyond the 3-o'clock and 9-o'clock position.
2. Pedal in the opposite direction to the *direction of travel* until the desired speed has been reached.

7.19 Brakes

⚠WARNING Crash caused by brake failure

Oil or lubricant on the brake disc in a disc brake or on the rim of a rim brake can cause the brake to fail completely. This may cause a crash with serious injuries.

- ▶ Never allow oil or lubricant to come into contact with the brake disc or brake linings or on the rim of a rim brake.
- ▶ If the brake linings have come into contact with oil or lubricant, contact specialist dealer to have the components cleaned or replaced.

If the brakes are applied continuously for a long time (e.g. while riding downhill for a long time), the fluid in the brake system may heat up. This may create a vapour bubble. This will cause air bubbles or water contained in the brake system to expand. This may suddenly make the lever travel wider. This may cause a crash with serious injuries.

- ▶ Release the brake regularly when riding downhill for a longer period of time. Use the front and rear wheel brakes alternately.

The motor's drive force is switched off during the ride as soon as the pedelec rider is no longer pedalling. The electric drive system does not switch off when braking.

- ▶ In order to achieve optimum braking results, do not pedal while braking.

7.19.1 Using the handbrake

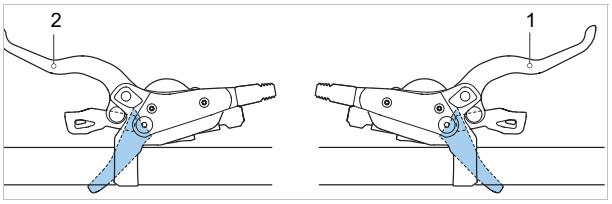

Figure 165: Handbrake, front (2) and rear (1) – SHIMANO brake used as an example

- ▶ Pull the left *handbrake to apply the front wheel brake.*
- ▶ *Pull the right handbrake to apply the rear wheel brake*.

7.19.2 Using the back-pedal brake

Only applies to pedelecs with this equipment

1. Move pedals a little beyond the 3-o'clock and 9-o'clock position.
2. Pedal in the opposite direction to the *direction of travel* until the desired speed has been reached.

7.20 Switching gears

⚠CAUTION Risk of a crash due to a level of assistance which is too high on starting up

If a level of assistance which is too high is used when starting up the pedelec with a powerful motor or when setting off on a hill, the pedelce may lurch violently. The front wheel can lift off the ground or the rear wheel may veer. This may cause a crash with injuries.

- ▶ Never start up pedelec with a high level of assistance.
- ▶ Always select the lowest gear when setting off to ensure the front wheel does not lift off the ground.
- ▶ When setting off on a hill, start with as little force as possible.
- ▶ Practice starting up before your first ride on public roads.

The selection of the appropriate gear is a prerequisite for a physically comfortable ride and making sure that the electric drive system functions properly. The ideal pedalling frequency is between 70 and 80 revolutions per minute.

- ▶ Stop pedalling briefly when changing gears. This makes it easier to switch gears and reduces wear on the drivetrain.

7.20.1 Using the derailleur gears

The speed and range can be increased while applying the same force if you select the right gear.

- ✓ Stop pedalling briefly when changing gears. This makes it easier to switch gears and reduces wear on the drivetrain. However, keep the crank moving while switching gears.

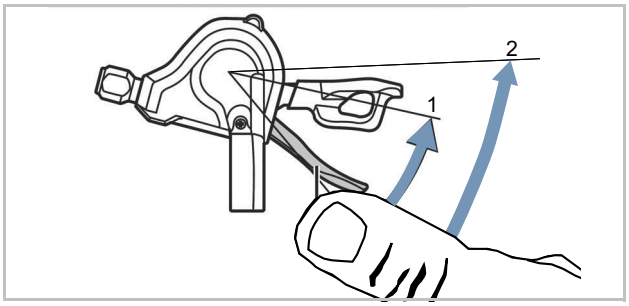

Figure 166: Switching gears with lever A, using gear shift SL-M315 as an example

Lever A switches up from the smallest sprocket to the largest sprocket.

▶ Place shifter A in position 1.

⇨ System shifts one sprocket higher.

▶ Place shifter A in position 2.

⇨ System shifts two sprockets higher.

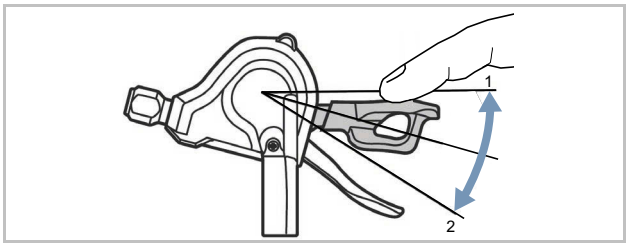

Figure 167: Switching gears with lever B, using gear shift SL-M315 as an example

Lever B switches down from the largest sprocket to the smallest sprocket. There are two ways to switch down a gear:

▶ Place shifter B in position 1.

⇨ System shifts one sprocket lower.

▶ Place shifter B in position 2.

⇨ System shifts one sprocket lower.

Switching gears

▶ Select the appropriate gear with the *gear shift unit*.

⇨ The gear shift switches gear.

⇨ The shifter returns to its original position.

▶ Clean and lubricate the rear derailleur if gear changes block.

7.20.2 Using pinion gears

7.20.2.1 Activating the SMART.SELECT automatic gear setting

✓ The pedelec is stationary.

▶ Activate START.SELECT by selecting the <Shift> menu in the settings on the on-board computer.

⇨ The system shifts into the selected starting gear automatically when the pedelec comes to a halt.

7.20.2.2 Activating the SMART.SELECT automatic gear setting

✓ The pedelec is stationary.

▶ Activate PRE.SELECT by selecting the <Shift> menu in the settings on the on-board computer.

⇨ The system automatically shifts into the perfect gear for the speed at the preferred pedalling frequency when the user rides without pedalling.

7.20.2.3 Shifting gear manually with E-Trigger TE1

Pinion gears switch between 9 or 12 speeds. It is possible to switch between several gears in one shift action (e.g. from 06 to 02). Changing gear is possible while stationary or with the crank stationary or turning backward and is gentle on the gears.

It is possible to shift down gears (12-11-10 ... -01) without any restrictions when under load. The gear change will not be completed if there is too much pressure on the crank or on the pedal.

A mechanism in the gears allows the ride to shift up gears (01-02-03 ... -12) under load. This is possible for all gear shifts, except a change of gear between the different half-gears. The rider needs to take pressure off the pedals briefly in this case.

▶ Always reduce pressure on the pedals when shifting down gears (12-11-10 ... -01).

Applies to P1.12 motor

▶ Always reduce pressure on the pedals when shifting up a gear from 04 to 05 or from 08 to 09.

Applies to P1.9 motor

Always reduce pressure on the pedals when shifting up a gear from 03 to 04 or from 06 to 07.

▶ Push the front shifter (1) backwards to shift up.

▶ Push the rear shifter (2) backwards to shift down.

⇨ The gear shift switches gear.

⇨ The crank occasionally drops about 10° after a gear change. This causes the bike to jerk until the pawl is securely engaged in the next tooth. This phenomenon cannot always be eliminated but will not cause damage to the gears.

7.20.3 Using a SHIMANO hub gear

Only applies to pedelecs with this equipment

⚠CAUTION **Crash caused by incorrect use**

If the rider applies too much pressure on the pedals during a gear change and activates the shifter or changes several gears at a time, their feet may slip from the pedals. This may cause a crash or flip-over with injuries.

Switching down several gears to a low gear may cause the twist grip shifter outer sleeve to come off suddenly. This will not prevent the twist grip shifter from functioning correctly since the outer guide returns to its original position after the gear change is complete.

▶ Apply little pressure on the pedals while changing gears.

▶ Never change more than one gear at a time.

Notice The interior hub is not completely waterproof. If water gets into the hub, it may rust and the gear switch function may no longer function as a result.

▶ Never use the pedelec in places where water may get into the hub.

Notice In rare cases, noises may be heard from the rear derailleur in the hub interior after a gear change. This is normal when gears are changed.

Notice Never detach the hub yourself. Contact specialist dealer.

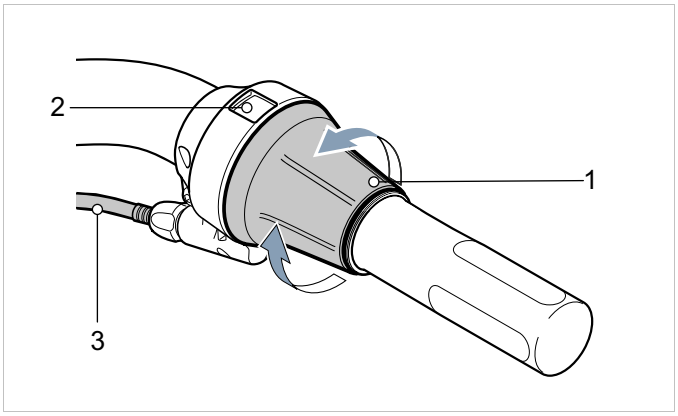

Figure 168: SHIMANO SL-C30000-7O gear shift

▶ Turn the twist grip shifter (1) backwards to switch up a gear (4).

▶ Turn the twist grip shifter (1) forwards to switch down a gear (2).

⇨ The gear shift switches gear.

⇨ The screen display (3) shows the changed gear.

7.20.4 Using a SHIMANO hub gear

Only applies to pedelecs with this equipment

⚠CAUTION **Crash caused by incorrect use**

If the rider applies too much pressure on the pedals during a gear change and activates the shifter or changes several gears at a time, their feet may slip from the pedals. This may cause a crash or flip-over with injuries.

Switching down several gears to a low gear may cause the twist grip shifter outer sleeve to come off suddenly. This will not prevent the twist grip shifter from functioning correctly since the outer guide returns to its original position after the gear change is complete.

- ▶ Apply little pressure on the pedals while changing gears.
- ▶ Never change more than one gear at a time.

Notice The interior hub is not completely waterproof. If water gets into the hub, it may rust and the gear switch function may no longer function as a result.

- ▶ Never use the pedelec in places where water may get into the hub.

Notice In rare cases, noises may be heard from the rear derailleur in the hub interior after a gear change. This is normal when gears are changed.

Notice Never detach the hub yourself. Contact specialist dealer.

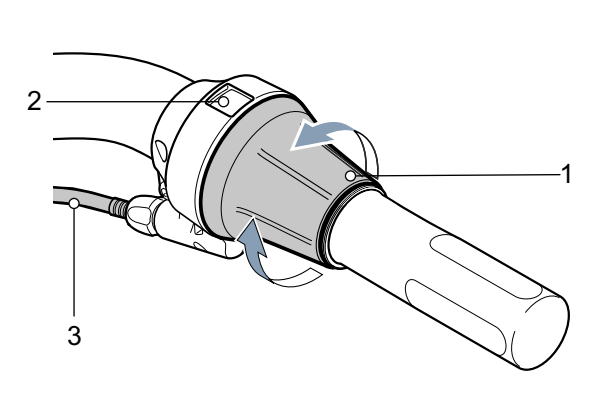

Figure 169: SHIMANO SL-C30000-7O gear shift

- ▶ Turn the twist grip shifter (1) backwards to switch up a gear (4).
- ▶ Turn the twist grip shifter (1) forwards to switch down a gear (2).
- ⇨ The gear shift switches gear.
- ⇨ The screen display (3) shows the changed gear.

7.21 Adjusting the suspension fork

▶ Adjusting the suspension and damping on the suspension fork or on the remote control (suspension fork) while riding:

Use	Position
Suspension	
Downhill rides and uneven terrain	Open or OPEN
Flat, hilly, even or slightly bumpy terrain or uneven roads	Threshold or medium position
Uphill or tarmacked roads	Lock out or LOCK
Damping	
Bumpy terrain	Soft
Uniformly hilly terrain and around bends	Hard

7.21.1 Adjusting the suspension fork suspension

Lockout

Some suspension forks thus feature a lockout on the fork crown or a *remote lockout* activated on the handlebars.

A suspension system is designed to cushion and compensate for unevenness on a surface whether the user is riding on bumpy cycle paths, dirt roads or off road. A suspension system absorbs great deal of motor and muscle power during rides uphill or on optimally tarmacked roads. This increases energy consumption and reduces propulsion. It thus makes sense to lock the suspension on tarmacked roads and when riding uphill.

The lockout setting prevents the suspension fork from deflecting until there is a strong impact force. The suspension fork deflects when a very strong impact or downward movement occurs.

Threshold (optional)

Just like the lockout, the threshold mode prevents the suspension fork from deflecting. The suspension fork deflects when a medium or strong impact or downward force occurs.

7.22 Parking

Notice Heat or direct sunlight can cause the *tyre pressure* to increase above the permitted maximum pressure level. This can destroy the *tyres*.

- ▶ Never park the pedelec in the sun.
- ▶ On hot days, check the *tyre pressure* regularly and adjust it as necessary.

Notice Moisture penetrating at cold temperatures may impair individual functions due to the open structural design.

- ▶ Always keep the pedelec dry and free from frost.
- ▶ If the pedelec is used at temperatures below 3 °C, the specialist dealer must perform maintenance beforehand and prepare it for winter use.

Notice The pedelec's force of weight may cause the kickstand to sink into soft ground, possibly causing the pedelec to topple over as a result.

- ▶ The pedelec must be parked on firm, level ground only.

1. Switch off the drive system.
2. After getting off, use your foot to lower the kickstand completely before parking. Ensure that it is stable.
3. Park the pedelec carefully and check that it is stable.
4. Protect saddle with saddle cover if you park the pedelec outside.
5. Lock the pedelec with the bicycle lock.
6. Remove battery to protect it against theft.
7. Clean and service pedelec after every ride; see Section 7.7.

Checklist after each ride

Cleaning		
☐	Lights and reflectors	See Section 7.7.5
☐	Brake	See Section 7.7.5
☐	Suspension fork	See Section 7.7.1
☐	Suspension seat post	See Section 7.7.6
☐	Rear frame damper	See Section 7.7.7
☐	Pedal	See Section 7.7.4
Servicing		
☐	Suspension fork	See Section 3

7.22.1 Screwing in the quickly adjustable stem

Only applies to pedelecs with this equipment

Screw in the quickly adjustable stem to save space when parking.

1 Open stem clamping lever.

2 Press handlebars down as far as they will go.

Figure 170: Adjusting the height

3 Use your finger to lift the unlocking bolt.

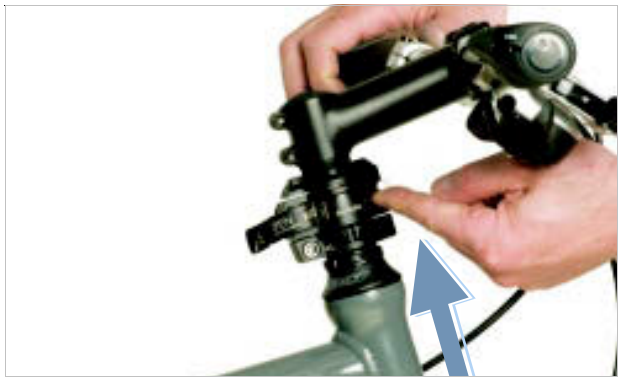

Figure 171: Pressing the unlocking bolt upwards

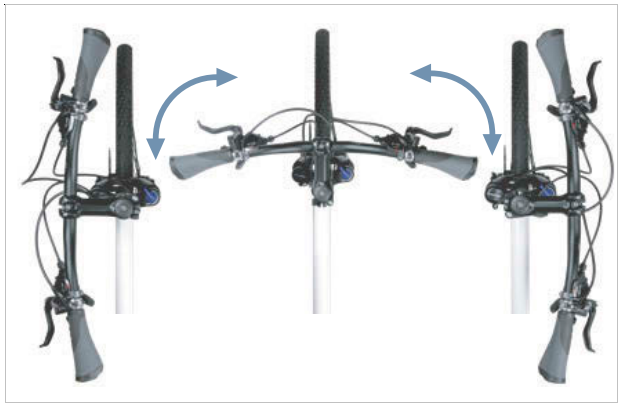

Figure 172: Turn handlebars.

4 Turn handlebars by 90° so that they are straight.

5 Close stem clamping lever.

7.23 Folding up the pedal

⚠CAUTION Crushing fingers in the pedal folding latch

The pedal folding latch uses a high clamping force. There is a risk of crushing fingers in the flap.

▶ Never allow the pedal folding mount to snap shut uncontrollably.

▶ Be careful where you position your fingers when opening and closing.

May lead to minor or moderate injuries if ignored. Low-risk hazard.

✓ Clean the pedal (see Section 7.7.4).

1 Use two fingers to pull the pedal folding latch (1) downwards and hold in position.

⇨ The folding system is unlocked.

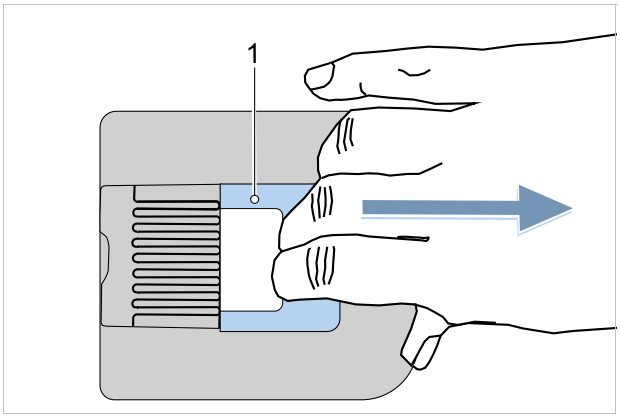

Figure 173: Pulling the pedal folding latch (1) downwards

2 Fold the pedal upwards.

3 Release your grip to carefully allow the pedal folding latch to return to its original position.

⇨ The pedal is folded away.

7.23.1 Activating the lock function

Only applies to pedelecs with this equipment

▶ Remove the on-board computer used during set-up.

⇨ The lock function is activated. The drive system now provides no assistance However, the rider can continue to use the pedelec without assistance.

⇨ The drive unit will emit a lock sound (an audible signal) as long as the drive system is switched on.

⇨ The lock function status is displayed with a lock icon on the on-board computer for around 3 seconds.

7.23.1.1 Activating for System Controller and Purion 200

⇨ The eBike Lock function is activated automatically in the System Controller by switching the electric drive system off.

⇨ The drive unit will emit a lock sound (an audible signal) as long as the drive system is switched on.

⇨ The System Controller control panel flashes white and (optionally) displays a lock symbol on the screen whenever the eBike Lock function is active after switching on.

8 Cleaning, servicing and inspection

⚠WARNING **Crash caused by brake failure**

Oil or lubricant on the brake disc in a disc brake or on the rim of a rim brake can cause the brake to fail completely. This may cause a crash with serious injuries.

- ▶ Never allow oil or lubricant to come into contact with the brake disc or brake linings or on the rim of a rim brake.
- ▶ If the brake linings have come into contact with oil or lubricant, contact specialist dealer to have the components cleaned or replaced.

After cleaning, servicing or repair, carry out a few test brake applications.

⚠WARNING The brake system is not designed for use on a bicycle which is placed on its side or turned upside down. The brake may not function correctly as a result. This can cause a crash, which may result in injuries.

- ▶ If bicycle has been placed on its side or turned upside down, apply the brakes a couple of times before setting off to ensure they work as normal.

⚠WARNING The brake seals are unable to withstand high pressures. Damaged brakes can fail and cause an accident with injury.

- ▶ Never clean the bicycle with a pressure washer or compressed air.
- ▶ Take great care when using a hosepipe. Never point the water jet directly at the seal section.

Notice Water may enter the inside of the bearings if you use a steam jet. This dilutes the lubricant inside, the friction increases and, as a result, the bearings are permanently damaged in the long term. Water may also penetrate the electric components and damage them permanently.

- ▶ Never clean bicycle with a pressure washer, water jet or compressed air.

Notice Greased parts, such as the seat post, the handlebars or the stem, may no longer be safely and reliably clamped.

- ▶ Never apply grease or oil to parts which are clamped.

Notice Harsh cleaning agents such as acetone, methylene and trichloroethylene and solvents such as thinners, alcohol and corrosion protection can attack bicycle components and damage them permanently.

- ▶ Use approved care and cleaning products only.

Complying with these cleaning instructions is the only way to reduce wear on components, increase the operating hours and guarantee safety.

8.1 Before each ride

8.1.1 Checking the safety guards

The chain or belt guards, mudguards or the motor cover may break and fall off when the bicycle is transported or parked outside.

- ▶ Check that all guards are in place.
- ▶ Take bicycle out of service if a guard is damaged or missing. Contact specialist dealer.

8.1.2 Checking the frame

- ▶ Check frame for cracks, warping and damage to the paintwork.
- ▶ If there are any cracks, warping or damage to the paintwork, remove the bicycle from service. Contact specialist dealer.

8.1.3 Checking the fork

- ▶ Check fork for cracks, warping, tarnished components, leaked oil and damage to the paintwork. Also look at concealed sections on the vehicle's lower surfaces.
- ⇨ If there are any cracks, warping, tarnished components, leaked oil or damage to the paintwork, remove the bicycle from service. Contact specialist dealer.

8.1.4 Checking the rear frame damper

▶ Check rear frame damper for cracks, warping, tarnished components, leaked oil and damage to the paintwork. Also look at concealed sections on the vehicle's lower surfaces.

⇨ If there are any cracks, warping, tarnished components, leaked oil or damage to the paintwork, remove the bicycle from service. Contact specialist dealer.

8.1.5 Checking the pannier rack

1 Hold onto bicycle by its frame. Hold onto pannier rack with the other hand.

2 Move the pannier rack backwards and forwards to check that all screw connections are firmly in place.

⇨ Tighten loose screws.

⇨ Attach loose baskets permanently with a basket bracket or cable ties.

8.1.6 Checking the guards

1 Hold onto bicycle by its frame. Hold onto mudguard with the other hand.

2 Move the mudguard backwards and forwards to check that all screw connections are firmly in place.

⇨ Tighten loose screws.

8.1.7 Check wheel concentricity

▶ Lift the front and rear wheels one after the other and spin each wheel when lifted.

⇨ If the wheel is loose or crooked when it turns, take bicycle out of service. Contact specialist dealer.

8.1.8 Checking the quick releases

▶ Check quick releases to ensure that all quick releases are firmly in their fully closed end position.

⇨ If a quick release is not firmly in its closed end position, open quick release and place in its end position.

⇨ If the quick release cannot be firmly placed in its end position, take bicycle out of service. Contact specialist dealer.

8.1.9 Checking the suspension seat post

▶ Deflect the suspension seat post and let it rebound.

⇨ If you hear unusual noises when the suspension seat post deflects and rebounds, or it yields without any resistance, take bicycle out of service. Contact specialist dealer.

8.1.10 Checking the bell

1 Press the bell button downwards.

2 Let button spring back.

⇨ If you do not hear a clear, distinct ring of the bell, replace bell. Contact specialist dealer.

8.1.11 Checking the handles

▶ Check the handles are firmly in place.

⇨ Screw loose handles firmly into place.

8.1.12 Checking the riding light

1 Switch light on.

2 Check that the headlight and rear light come on.

⇨ If the headlight and rear lights do not come on, take bicycle out of service. Contact specialist dealer.

8.1.13 Checking the brake

1 Pull both handbrakes when stationary.

2 Push the pedals.

⇨ If no resistance is generated in the handbrake's usual position, take bicycle out of service. Contact specialist dealer.

⇨ If the brake is losing fluid, take bicycle out of service. Contact specialist dealer.

8.2 After every ride

The following tools and cleaning agents should be ready for use to clean the bicycle after each ride:

8.2.1 Cleaning the riding light and reflectors

1 Clean headlight, rear light and reflectors with a damp cloth.

8.2.2 Cleaning the brake

▶ Clean dirt on the rim and brake components with a slightly dampened cloth.

8.2.3 Cleaning the suspension fork

1 Remove dirt and deposits from the stanchions and deflector seals with a damp cloth. Check stanchions for dents, scratches, staining or leaking oil.

2 Lubricate the dust seals and stanchions with a few drops of silicone spray.

3 Service the suspension fork after cleaning.

8.2.4 Cleaning the suspension seat post

▶ Clean dirt on the articulated joints with a slightly dampened cloth immediately after a ride.

8.2.5 Servicing the suspension fork

▶ Apply fork oil to dust seals.

8.2.6 Cleaning the rear frame damper

▶ Clean dirt on the articulated joints with a slightly dampened cloth immediately after a ride.

8.2.7 Cleaning the pedals

▶ Clean pedals with a brush and soapy water.

8.3 Basic cleaning

The following are required for basic cleaning:

8.3.1 Remove and clean by hand

The basic components include the fork, the pannier rack, the guards and the kickstand.

1 Soak the components with dishwashing liquid if the dirt is thick and ingrained.

2 After leaving it to soak for a short time, remove the dirt and mud with a sponge, brush and toothbrushes.

3 Rinse off the components with water from a watering can.

4 Wipe away oil stains with a degreaser.

8.3.2 Cleaning the stem

1 Clean stem with a cloth and soapy water.

2 Rinse off component with water from a watering can.

8.3.3 Cleaning the handlebars

1 Clean handlebars, including handles and all gears or twist grip shifter, with a cloth and soapy water.

2 Rinse off component with water from a watering can.

8.3.4 Cleaning the handles

1 Clean handles with sponge, water and soapy water.

2 Rinse off component with water from a watering can. Care for rubber handles after cleaning (see Section 6.4.8.1).

8.3.4.1 Cleaning the leather handles

Leather is a natural product and has similar properties to human skin. Regular cleaning and care help to prevent leather dehydrating, fading or becoming brittle or stained.

1 Remove dirt with a soft, damp cloth. Remove stubborn stains with a leather cleaner.

2 Service leather handles after cleaning (see Section 6.4.8.2).

8.3.5 Cleaning the seat post

1 Clean seat post with a cloth and soapy water.

2 Rinse off component with water from a watering can.

3 Wipe away any grease or assembly paste residue with a cloth and degreaser.

8.3.6 Cleaning the saddle

1 Clean the saddle with lukewarm water and a cloth dampened with soapy water.

2 Rinse off component with water from a watering can.

8.3.6.1 Cleaning the leather saddle

Leather is a natural product and has similar properties to human skin. Regular cleaning and care help to prevent leather dehydrating, fading or becoming brittle or stained.

1 Remove dirt with a soft, damp cloth.

2 Remove stubborn stains with a leather cleaner.

3 Service leather saddle after cleaning (see Section 6.4.11).

8.3.7 Cleaning the tyres

1 Clean tyres with a sponge, a brush and soap cleaner.

2 Rinse off component with water from a watering can.

3 Remove any embedded chips and small stones.

8.3.8 Cleaning the spokes and spoke nipples

1 Clean spokes from the inside to the outside with a sponge, brush and soapy water.

2 Clean rim with a sponge.

3 Rinse off component with water from a watering can.

4 Care for spoke nipples after cleaning (see Section 6.4.13).

8.3.9 Cleaning the hub

1 Put on protective gloves.

2 Remove dirt from hub with a sponge and soapy water.

3 Rinse off component with water from a watering can.

4 Wipe off oily dirt with a degreaser and a cloth.

8.3.10 Cleaning the switching elements

1 Clean gear shift and shift cables with water, a brush and dishwashing liquid.

2 Rinse off component with water from a watering can.

8.3.11 Cleaning the SRAM AXS rear derailleur

Notice The rear derailleur battery or the battery mount battery will be permanently damaged if water enters them.

▶ If fitted, remove the rear derailleur battery from the SRAM rear derailleur and insert the battery separator into the rear derailleur before cleaning.

▶ Never immerse the rear derailleur battery in water.

▶ Never use acidic or degreasing agents on the electrical components.

▶ Never use chemical cleaning agents or solvents as they can destroy the plastic components.

▶ Clean all derailleur components with a damp cloth.

8.3.11.1 Cleaning the shifter

▶ Carefully clean shifter with a damp, soft cloth.

8.3.12 Cleaning the cassette, chain wheels and front derailleur

1 Put on protective gloves.

2 Spray cassette, chain wheels and front derailleur with degreasing agent.

3 Clean coarse dirt with a brush after soaking for a short time.

4 Wash down all parts with dishwashing liquid and a toothbrush.

5 Rinse off component with water from a watering can.

8.3.13 Cleaning the brake

8.3.13.1 Cleaning the handbrake

▶ Carefully clean the handbrake with a damp, soft cloth.

8.3.14 Cleaning the brake disc

Notice

▶ Protect brake disc against lubricants and grease from hands.

1 Put on protective gloves.

2 Spray brake disc with brake disc cleaning spray.

3 Wipe with a cloth.

8.3.15 Cleaning the belt

Notice

▶ Never use aggressive (acid-based) cleaners, rust removers or degreasers when cleaning the belt.

1 Dampen a cloth with soapy water. Place the cloth on the belt.

2 Hold and apply slight pressure while slowly turning the rear wheel so that the belt passes through the cloth.

8.3.16 Cleaning the chain

Notice

▶ Never use aggressive (acid-based) cleaners, rust removers or degreasers when cleaning the chain.

Notice

▶ Never use gun oil or rust remover spray.

Notice

▶ Never use chain cleaning devices or chain cleaning baths.

Notice

▶ Have chain with all-round guard cleaned and serviced during major inspection.

✓ Place newspaper or paper towels underneath to collect dirt.

1 Slightly dampen a brush with dishwashing liquid. Brush both sides of the chain.

2 Dampen a cloth with soapy water. Place the cloth on the chain.

3 Hold and apply slight pressure while slowly turning the rear wheel, so the chain passes through the cloth.

4 Wipe off oily, dirty chains thoroughly with a cloth and degreaser.

5 Service the chain after cleaning (see Section 6.4.16).

8.3.16.1 Cleaning the chain and all-round chain guard

Notice

▶ The chain guard must be removed before cleaning. Contact specialist dealer.

▶ Clean water hole on the chain guard lower surface.

▶ Service the chain after cleaning (see Section 6.4.16.1).

8.4 Servicing

Complying with these servicing instructions is the only way to reduce wear on components, increase the operating hours and guarantee safety.

8.4.1 Servicing the frame

Notice

▶ Hard wax polish and protection wax are particularly resistant on gloss paintwork. These car accessory retail products are unsuitable for matt paint finishes.

Notice

▶ Try wax spray out on a small spot before applying.

1 Dry frame with a cloth. Spray frame with spray wax and leave to dry.

2 Wipe away any wax residue with a cloth.

8.4.2 Servicing the fork

Notice

▶ Hard wax polish and protection wax are particularly resistant on gloss paintwork. These car accessory retail products are unsuitable for matt paint finishes.

Notice

▶ Try wax spray out on a small spot before applying.

1 Dry fork with a cloth.

2 Spray frame care oil on frame and leave to dry.

3 Wipe away any wax residue with a cloth.

8.4.3 Caring for the pannier rack

1 Dry pannier rack with a cloth.

2 Spray pannier rack with spray wax and leave to dry. Wipe pannier rack with a cloth.

3 Protect chafing points on panniers with adhesive film. Replace worn adhesive film.

4 Care for coil springs with silicone spray or wax spray from time to time.

8.4.4 Servicing the mudguard

▶ Depending on the requirements for the mudguard material, apply hard wax polish, metal polish or a plastic care product as per the product instructions.

8.4.5 Servicing the kickstand

1 Dry kickstand with a cloth.

2 Spray kickstand rack with spray wax and leave to dry.

3 Wipe down kickstand with a cloth.

4 Lubricate the kickstand joints with spray oil.

8.4.6 Servicing the stem

1 Spray painted and polished metal surfaces with wax spray and leave to dry.

2 Wipe away any wax residue with a cloth.

3 Apply silicone or Teflon oil to the stem shaft tube and the quick release lever pivot point with a cloth.

4 If you have a Speedlifter Twist, also apply oil to the unlocking bolt groove in the Speedlifter body.

5 Apply a little acid-free lubricant grease between the stem quick release lever and the sliding piece to reduce the quick release lever operating force.

6 If you have a stem with a cone clamp, apply a new protective layer of assembly paste onto the stem and fork steerer contact point once a year.

8.4.7 Caring for handlebars

1 Spray painted and polished metal surfaces with wax spray and leave to dry.

2 Wipe away any wax residue with a cloth.

8.4.8 Caring for the handles

8.4.8.1 Caring for rubber handles

Notice

▶ Never apply talcum powder to leather or foam handles.

▶ Apply talcum powder to sticky rubber handles.

8.4.8.2 Caring for leather handles

Standard leather care products keep leather smooth and resistant, brighten its appearance and improve or replace stain protection.

1 Try leather care product out on a less visible spot before use.

2 Care for leather handles with a leather care product.

8.4.9 Servicing the seat post

1 Carefully preserve screw connections with wax spray. In doing so, ensure that no wax is applied to the metal contact surfaces.

2 Replace the assembly paste protective layer on the metal contact surfaces on the seat post and seat tube every year.

8.4.9.1 Servicing the suspension seat post

1 Lubricate articulated joints with spray oil.

2 Deflect and let the suspension seat post rebound five times. Remove any surplus lubricant with a clean cloth.

8.4.9.2 Servicing the carbon seat post

Notice Rain and puddle water can cause contact corrosion if carbon seat posts are used in an aluminium frame without protective assembly paste. It may then take a great deal of force to remove the seat post. The carbon seat post may break as a result.

1 Take out the carbon seat post.

2 Remove old assembly paste with a cloth.

3 Apply new assembly paste with a cloth.

4 Re-insert the carbon seat post.

8.4.10 Caring for the rims

▶ Care for chrome rims, stainless steel rims and polished aluminium with chrome or metal polish. Never apply polish to the brake surface.

8.4.11 Caring for the leather saddle

Standard leather care products keep leather smooth and resistant, brighten its appearance and improve or replace stain protection.

1 Try leather care product out on a less visible spot before use.

2 Service leather saddle from below with a leather care product. Only maintain the top of leather saddles with a leather care product if they are badly worn and dried-out.

3 Avoid wearing light-coloured trousers after care due to staining.

8.4.12 Servicing the hub

1 Apply wax spray, especially around the spoke holes. In doing so, ensure that no wax is applied to brake parts.

2 Treat rubber seals with a cloth with one or two drops of silicone spray. Never use oil if you have disc brakes.

8.4.13 Servicing the spoke nipples

1 Apply wax spray onto the spoke nipples from the rim side.

2 Treat heavily corroded spoke nipples with a drop of penetrating of special care oil.

8.4.14 Servicing the gear shift

8.4.14.1 Servicing the rear derailleur articulated shafts and jockey wheel

▶ Apply Teflon spray to front and rear derailleur articulated shafts and jockey wheels.

8.4.14.2 Servicing the shifter

Notice

▶ Never treat shifters with degreaser or penetrating oil spray.

▶ Lubricate articulated joints and mechanical parts which are accessible from outside with a few drops of spray oil or precision mechanics oil.

8.4.15 Servicing the pedals

1 Treat pedals with spray oil. In doing so, ensure that no lubricant is applied to the pedal surfaces.

2 Lubricate seals and mechanical parts sparingly with a few drops of oil.

3 Remove any surplus lubricant with a clean cloth.

4 Spray metal foot rests with silicone spray.

8.4.16 Servicing the chain

✓ Place newspaper or paper towels underneath to collect chain oil.

1 Lift rear wheel.

2 Turn the crank briskly in an anti-clockwise direction.

3 Use slight finger pressure to the chain oil bottle to apply a wafer-thin thread of oil to the chain links. The faster the crank is turned, the thinner the threads of oil will be.

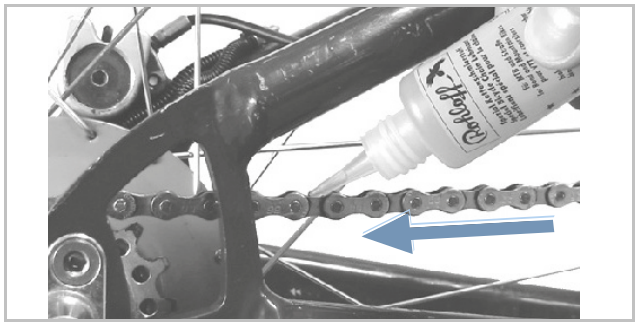

Figure 174: Lubricating the chain

4 Remove excessive chain oil with a cloth. If you apply too much oil, it will make the chain all the dirtier at a later point in time.

5 Leave chain oil to penetrate into the chain links for a few hours or overnight.

8.4.16.1 Servicing the chain and all-round chain guard

✓ Place newspaper or paper towels underneath to collect chain oil.

1 Lift rear wheel.

2 Turn the crank briskly in an anti-clockwise direction.

3 Use slight finger pressure to the chain oil bottle to apply a wafer-thin thread of oil onto the chain links through the oil hole on the upper surface of the chain guard. The faster the crank is turned, the thinner the threads of oil will be.

4 Remove excessive chain oil with a cloth. If you apply too much oil, it will make the chain all the dirtier at a later point in time.

5 Leave chain oil to penetrate into the chain links for a few hours or overnight.

8.4.17 Servicing the brake

8.4.17.1 Servicing the handbrake

Notice

▶ Never treat brake handbrake with degreaser or penetrating oil spray.

▶ Lubricate articulated joints and mechanical parts which are accessible from outside with a few drops of spray oil or precision mechanics oil.

8.5 Inspection

8.5.1 Checking the wheel

1 Hold the bicycle firmly.

2 Hold onto the front or rear wheel and try to move the wheel sideways. In doing so, check to see if the wheel nuts or quick releases move.

⇨ If the wheel moves or the wheel nut or quick release moves sideways, take bicycle out of service. Contact specialist dealer.

3 Lift bicycle slightly. Turn front or rear wheel. In doing so, check whether the wheel deflects sideways or outwards.

⇨ If the wheel deflects sideways or outwards, take bicycle out of service. Contact specialist dealer.

8.5.1.1 Checking the tube

Notice If the tyre pressure is too low, the tyre cannot support its full load capacity. The tyre is not stable and may come off the rim. If the tyre pressure is too high, the tyre may burst.

Tyres are wear parts and degrade due to fatigue, storage, environmental influences or mechanical impacts. Only optimum tyre pressure will guarantee greater safety, lower rolling resistance, effective protection against punctures and a longer service life.

Air loss

Even the most airtight tube will gradually lose pressure since the air pressures in bicycle tyres are significantly higher and the wall thicknesses significantly finer than in a car tyre. Pressure loss of 1 bar per month can be considered normal. At high pressures, this loss occurs significantly faster while loss is much slower at lower pressures.

Checking tyre pressure

The permitted pressure range is indicated on the side of the tyre.

Figure 175: Tyre pressure specification in bar (1) and psi (2)

▶ Verify tyre pressure against the value noted in the bike pass every 10 days as a minimum.

Dunlop valve

The tyre pressure cannot be measured on the simple Dunlop valve. The tyre pressure is thus measured in the filling tube while pumping slowly with the bicycle air pump.

✓ It is recommendable to use a bicycle air pump with a pressure gauge.

1 Unscrew and remove the valve cap.

2 Undo the rim nuts.

3 Connect the bicycle air pump.

4 Pump up the tyre slowly, keeping an eye on the tyre pressure.

5 Correct the tyre pressure according to specifications in the bike pass.

6 If the tyre pressure is too high, unfasten the union nut, let air out and re-tighten the union nut.

7 Remove the bicycle air pump.

8 Screw the valve cap tight.

9 Screw the rim nut gently against the rim with the tips of your fingers.

⇨ Correct tyre pressure if necessary (see Section 7.5.8.1).

Schrader valve

✓ It is recommended to use an air pump at a filling station or a modern bicycle air pump with a pressure gauge. Older and simple bicycle air pumps are unsuitable for filling tyres via a Schrader valve.

1 Unscrew and remove the valve cap.

2 Undo the rim nuts.

3 Connect the bicycle air pump.

4 Pump up the tyre slowly, keeping an eye on the tyre pressure.

⇨ The tyre pressure has been adjusted as per indications.

5 Remove the bicycle air pump.

6 Screw the valve cap tight.

7 Screw the rim nut gently against the rim with the tips of your fingers.

⇨ Correct tyre pressure if necessary (see Section 7.5.8.1).

Presta valve

✓ It is recommendable to use a bicycle air pump with a pressure gauge. You must observe the bicycle air pump operating instructions.

1 Unscrew and remove the valve cap.

2 Open the knurled nut around four turns.

3 Carefully attach the bicycle air pump so that you do not bend the valve insert.

4 Pump up the tyre slowly, keeping an eye on the tyre pressure.

5 Correct the tyre pressure as per the specifications on the tyre.

6 Remove the bicycle air pump.

7 Tighten the knurled nut with your fingers.

8 Screw the valve cap tight.

9 Screw the knurled nut gently against the rim with the tips of your fingers.

⇨ Correct tyre pressure if necessary (see Section 7.5.8.1).

8.5.1.2 Checking the tyres

The tread is far less important for bicycle tyres than it is for car tyres, for example. Consequently, tyres with a worn tread can still be used, except if the tyre is on a mountain bike.

1 Check the tread for wear. The tyre is worn if the anti-puncture protection or the carcass cords are visible on the tread.
Since resistance to punctures also depends on the thickness of the tread, it may be a good idea to change the tyre earlier.

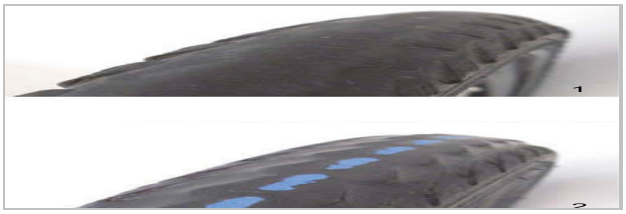

Figure 176: Tyres without a tread which can be replaced (1) and tyres with puncture protection showing through (2) must be replaced

2 Check the side walls for wear. If there are any cracks or tears, the tyre must be replaced.

3 Replacing a tyre requires considerable mechanical expertise. If a tyre is worn, it needs to be replaced at a specialist dealer's.

8.5.1.3 Checking the rims

⚠WARNING Crash caused by a worn rim

A worn rim can break and block the wheel. This may cause a crash with serious injuries.

▶ Check rim wear on a regular basis.

▶ Do not use bicycle if the rim has any cracks or is warped. Contact specialist dealer.

Figure 177: Examples of fatigue cracks (1) and ageing cracks (2)

Rims are wear parts and degrade due to fatigue, mechanical impacts, environmental influences or due to braking if rim brakes are used.

▶ Check the rim bed thoroughly for wear.

⇨ The rims of a rim brake with an invisible wear indicator are worn as soon as the wear indicator becomes visible in the rim joint area.

⇨ The rims with a visible wear indicator are worn as soon as the black, all-round groove on the pad friction surface is no longer visible.

▶ We recommend that you also replace the *rims* at the same time as every second brake lining replacement.

8.5.1.4 Checking the nipple holes

Nipples cause fatigue and stress on the edge of the nipple hole.

▶ Check whether there are cracks on the edge of the nipple hole.

If there are cracks on the edge of the nipple hole, contact your specialist dealer.

8.5.1.5 Checking the nipple well

The nipple holes can weaken the tyre bed.

▶ Check to see if any cracks are forming around the nipple holes.

⇨ Contact your specialist dealer if there are any cracks radiating from the nipple holes.

8.5.1.6 Checking the rim hooks

Mechanical impacts can warp the rim hooks. There is no longer a guarantee that a tyre can be fitted safely if this is the case.

▶ Check for twisted rim hooks.

⇨ Replace rims with twisted rim hooks. Never repair the rim with pliers and bend the hook back.

8.5.1.7 Checking the spokes

▶ Press spokes slightly together with your thumb and index finger. Check to ensure that the tension is the same for all spokes.

⇨ Contact your specialist dealer if the spokes are loose or are tensioned differently.

8.5.2 Checking the brake system

⚠CAUTION **Crash caused by brake failure**

Worn brake discs and brake linings and a lack of hydraulic fluid in the brake cable reduce braking power. This may cause a crash with serious injuries.

▶ Check brake disc, brake linings and the hydraulic brake system regularly. Contact specialist dealer.

The inspection interval for the brake depends on how often it is used and on the weather conditions. If the bicycle is used under extreme conditions such as rain, dirt or high mileage, inspection must be performed more frequently.

8.5.2.1 Checking the handbrake

1. Check that all screws in the handbrake are firmly in place (see Section 3.5.4).
2. Tighten loose screws.
3. Check that handbrake is torsionally rigid on the handlebars (see Section 3.5.4).
4. Tighten loose screws.
5. Check that there is a gap of at least 1 cm between the handbrake and the handle when the handbrake is fully applied.
6. Adjust the grip distance if the gap is too narrow (see Section 5.2.19.5).
7. Check the braking effect by pedalling while pulling the handbrake.

▶ If the braking power is too weak, adjust the brake pressure point (see Section 6.5.9.8).

▶ Contact your specialist dealer if the pressure point cannot be reached.

8.5.2.2 Checking the hydraulic brake system

1. Pull on the handbrake and check whether any brake fluid leaks out of the lines, connections or on the brake linings.
2. If any brake fluid leaks from anywhere, take bicycle out of service. Contact specialist dealer.
3. Pull and hold handbrake several times.
4. If you are unable to clearly detect the pressure point and it changes, the brake needs to be bled. Contact specialist dealer.

8.5.2.3 Checking the Bowden cables

1. Pull on handbrake several times. Check whether the Bowden cables get stuck or they make scraping noises.
2. Check the physical condition of the Bowden cables for visible damage and check to see if wire strands are broken.
3. Have defective Bowden cables replaced. Contact specialist dealer.

8.5.2.4 Checking the disc brake

Checking the brake linings

▶ Check that the brake linings are no less than 1.8 mm wide at any point and there are no less than 2.5 mm between the brake lining and supporting plate.

Figure 178: Checking the brake lining when fitted with the help of the transport safety wear gauge

1 Check brake linings for damage and thick dirt.

⇨ Have damaged or very dirty brake linings replaced. Contact specialist dealer.

2 Pull handbrake and hold.

3 In doing so, check whether the transport safety wear gauge can fit between the brake linings supporting plates.

⇨ If the transport safety wear gauge fits between the supporting plates, the brake linings have not reached their wear limit.

⇨ Contact your specialist dealer if they are worn.

Checking the brake discs

✓ Put on gloves as the brake disc is very sharp.

1 Take hold of brake disc and wiggle it gently to check whether the brake disc is positioned against the wheel free of backlash.

2 Check that the brake linings move steadily and symmetrically back towards the brake disc when you pull and release handbrake.

⇨ If the brake disc can be moved or the brake linings move erratically, contact your specialist dealer.

3 Check that the brake disc is no less than 1.8 mm thick at any point.

⇨ If the brake disc is under the wear limit and is less than 1.8 mm thick, the brake disc must be replaced. Contact specialist dealer.

8.5.3 Check chain

▶ Check chain for rust, damage and chain links that are difficult to move.

⇨ Replace rusted, damaged or difficult-to-move chains since they will not withstand the tensile loads from the drive and will soon break. Contact your specialist dealer.

8.5.4 Checking the chain tension

Notice Excessive chain tension increases wear. If the chain tension is too low, there is a risk that the chain will slip off the chain wheels.

▶ Check the chain tension once a month.

8.5.4.1 Checking the tension in derailleur gears

The rear derailleur tensions the chain on bicycles with derailleur gears.

1 Check to see if the chain is sagging.

2 Gently press the rear derailleur forwards to check whether it moves and whether it goes back into position by itself.

⇨ If the chain is sagging or the rear derailleur does not go back into position by itself, contact your specialist dealer.

8.5.4.2 Checking the tension in the hub gear

3 Remove the chain guard on bicycles with a circumferential chain guard.

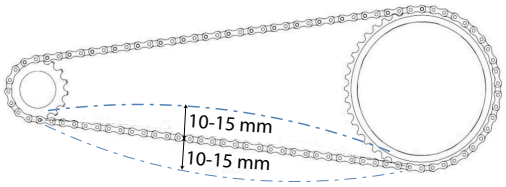

Figure 179: Checking the chain tension (example): 5 mm upwards, 10 mm downwards = 15 mm deviation

1 Lift chain upwards. Measure the distance to the centre. Press chain downwards. Measure the distance to the centre.

2 Add the two values together to calculate the deviation.

3 Check the chain tension at three to four points.

⇨ If the deviation is greater than 20 mm, tighten chain.

⇨ If the deviation is less than 10 mm, Loosen chain.

▶ If a hub gear is fitted, the rear wheel must be pushed backwards and forwards to tighten the chain. Contact specialist dealer.

▶ In the case of bicycles with a hub gear or back-pedal brake, the chain is tensioned by an eccentric bearing or movable fork end in the bottom bracket axle. Special tools and specialist knowledge are required to tension the chain. Contact specialist dealer.

8.5.5 Checking the chain for wear

Each chain has a wear limit. If this limited is exceeded, the chain needs to be replaced.

Manufacturer	Wear limits
SHIMANO	>1%
KCM	>0.8 mm per link
SRAM	>0.8%
ROHLOFF	S: >0.1 mm per link A: >0.075 mm per link

Table 25: Chain wear limit by manufacturer

8.5.5.1 Rough check

You can perform a rough check on the chain wheel by hand on conventional chains

1 Place the chain on the largest chain wheel.

2 Lift the chain from the front to the centre of the wheel.

⇨ If the chain can be lifted more than half a link from the chain wheel, carry out a check or contact your specialist dealer.

8.5.5.2 Check

There is a different wear gauge for each chain, depending on the manufacturer:

1 Insert gauge between two chain links on the right-hand side.

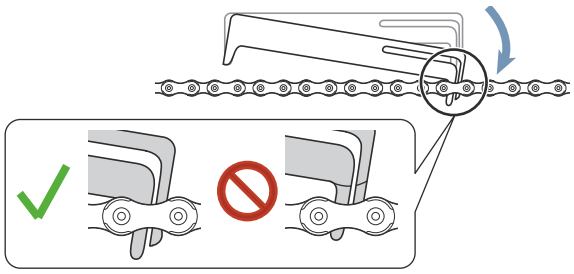

Figure 180: Gauge is inserted

2 Lower gauge down to the left-hand side.

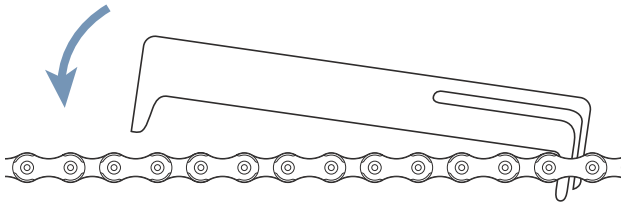

Figure 181: Lower gauge to the left

⇨ If the gauge does not fit between the links, the chain is not worn yet.

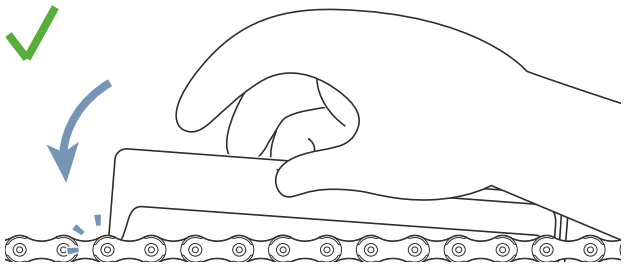

Figure 182: Gauge does not fit

⇨ If the gauge does not fit between the links, the chain is worn and must be replaced. Contact specialist dealer.

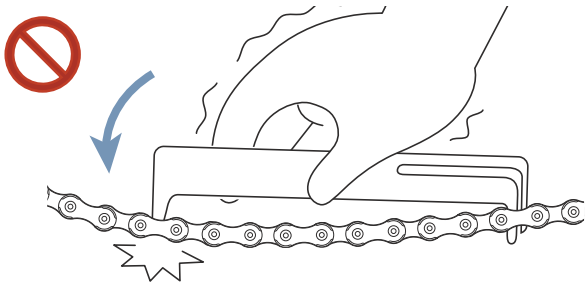

Figure 183: Gauge fits

8.5.6 Checking the belt

8.5.6.1 Checking the belt for wear

▶ Check belt for indications of wear:

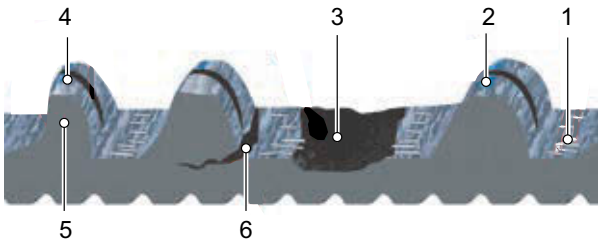

Figure 184: Indications of wear on a belt

1 Carbon tensile fibres are exposed
2 Worn webbing with visible polymer
3 Missing belt tooth
4 Imbalance
5 Shark tooth or
6 Cracks

⇨ If there is one or more indications of wear, replace belt. Contact specialist dealer.

8.5.6.2 Checking the belt sprocket for wear

▶ Check belt sprocket.

⇨ The tooth profile is rounded and the teeth are thick. The belt drive sprocket does not need to be replaced.

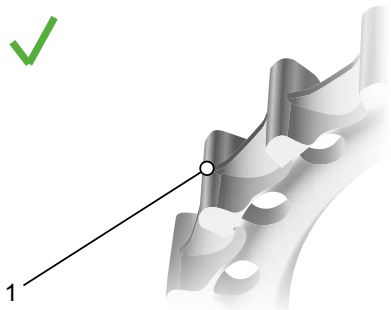

Figure 185: Optimum tooth profile

⇨ The tooth profile is pointed and teeth have worn thinner. Replace belt sprocket. Contact specialist dealer.

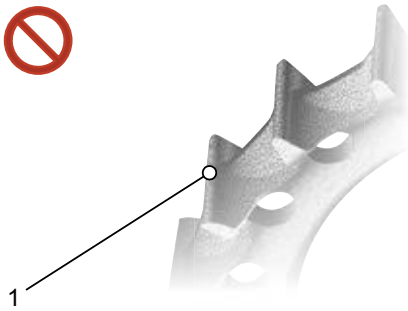

Figure 186: Worn tooth profile

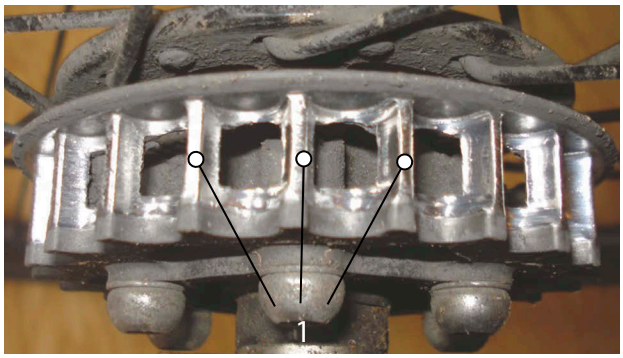

Figure 187: Photo showing worn tooth profile

8.5.6.3 Checking belt tension

If the belt tension is too low, this can cause the system to miss out a tooth or slip, i.e. the teeth on the belt slip over the teeth on the rear wheel belt sprocket. Excessive tension can cause damage to the bearings, sluggishness in the system and increased wear on the electric drive system. Belt tension adjustment varies depending on the bicycle. Common tensioning systems include angled or vertical fork ends, horizontally sliding dropouts and eccentric bottom bracket axle. There are three common methods of measuring belt tension:

- Gates Carbon Drive mobile app for iPhone® and Android®,
- Gates Krikit tension meter
- Eco tension tester.

The tension along the belt may vary slightly with any of these methods, so you should repeat the process several times. Turn the pedal a quarter after each measurement. Measure again.

The tools measure the tension only. They do not provide specifications for the required tension. The table below contains specifications for the correct tensioning range for Gates Carbon Drive belts.

	Steady pedalling	Sports usage
MTBs* and single-speed bicycles	45–60 Hz (35–45 lbs)	60–75 Hz (45–53 lbs)
Hub gear/pinion gear	35–50 Hz (28–40 lbs)	

Table 26: Specifications for tensioning

* The CDN and SideTrack systems are not permitted for mountain bikes, gears, bikes without a gear shift or for trekking or touring bikes.

These tension specifications are designed as initial guidance and may have to be corrected upwards or downwards, depending on the body size, gear ratio and the force applied to the pedals.

8.5.6.4 Gates Carbon Drive mobile app

The Gates Carbon Drive mobile app measures the belt tension based on the belt's natural frequencies (Hz). To do so, the app uses the phone's mic to record the sound of the belt and determines the main frequency.

✓ Download Gates Carbon Drive mobile app free of charge from the App Store or Google Play on your mobile phone.

✓ Measure in a quiet environment.

✓ Ensure that the phone microphone is switched on.

1 Open app.

2 Click on the tension symbol.

3 Click on MEASURE.

4 Point phone microphone towards the belt.

5 Pluck the belt so that the belt vibrates like a guitar string.

6 It is recommended to take several measurements for comparison. Turn the crank a quarter. Repeat frequency measurement.

7 Check the belt frequency displayed against the specifications for tensions in Table 44.

⇨ If the value is higher than the specification, reduce belt tension,

⇨ If the value is within the specified range, the belt tension has been correctly adjusted.

⇨ If the value is lower than the specification, increase belt tension.

8.5.7 Checking the riding light

1 Check the cable connections on the headlight and rear light for damage and corrosion and ensure they are firmly in position.

⇨ If cable connections are damaged or corroded, or are not firmly in positioned. take bicycle out of service. Contact specialist dealer.

2 Switch light on.

3 Check that the headlight and rear light come on.

⇨ If the headlight or rear lights do not come on, take bicycle out of service. Contact specialist dealer.

4 Place bicycle 5 m from the wall.

5 Stand the bicycle up straight. Hold the handlebars straight with both hands. Do not use the kickstand.

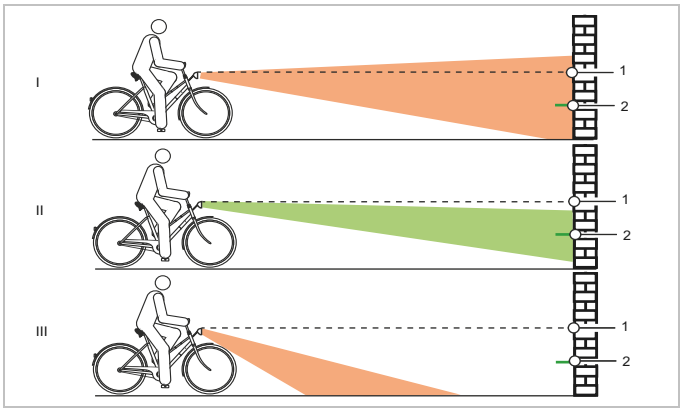

Figure 188: Light positioned too high (1), correctly (2) and too low (3)

6 Check the position of the light beam.

⇨ If the light is positioned too high or too low, adjust riding light (see Section 5.2.26.1).

8.5.8 Checking the stem

▶ The stem and quick release system must be inspected at regular intervals. The specialist dealer should adjust them if they require adjustment.

▶ If the hexagon socket screw is also loosened, the bearing clearance also needs to be adjusted. Medium-strength thread locker, such as Loctite blue, then needs to be applied to the loosened screws and the screws tightened as per specifications.

▶ Check metal contact surfaces on cone, stem clamping screw and fork steerer for corrosion.

⇨ Take bicycle out of service if there is any wear or signs of corrosion. Contact specialist dealer.

8.5.9 Checking the handlebars

1 Take hold of handlebars with both hands on the handles.

2 Move handlebars up and down and press to tilt.

⇨ If the handlebars can move, contact your specialist dealer.

3 Place front wheel in position where it can't move sideways (e.g. in a bike stand).

4 Hold handlebars firmly with both hands.

5 Check if the handlebars are able to twist against the front wheel.

⇨ If the handlebars can move, contact your specialist dealer.

8.5.10 Checking the saddle

1 Hold saddle firmly.

2 Check whether the saddle twists, tilts or can be pushed in one direction or other.

⇨ If the saddle twists, tilts or can be pushed in one direction or other, adjust the saddle (see Section 6.5.4).

⇨ Contact your specialist dealer if the saddle cannot be fixed into position.

8.5.11 Checking the seat post

1 Take seat post out of the frame.

2 Check seat post for cracks and corrosion.

3 Reinsert seat post.

8.5.12 Checking the pedal

1 Hold pedal and try to move it sideways toward the inside or outside. In doing so, observe whether the crank arm or bearing move sideways.

⇨ If the pedal, crank arm or crank bearing moves sideways, fasten screw on the pedal crank rear.

2 Hold pedal and try to move it upwards and downwards vertically. In doing so, observe whether the pedal, crank arm or crank bearing moves vertically.

⇨ If the pedal, crank arm or crank bearing moves vertically, fasten screw.

8.5.13 Checking the gear shift

1 Check that all gear shift components are free of damage.

2 Contact your specialist dealer if components are damaged.

3 Place the bicycle on stand.

4 Turn the pedal crank clockwise.

5 Switch through all speeds.

6 Check that pedelec can switch through all speeds without making unusual noises.

7 Adjust the gear shift if gears cannot be changed correctly.

8.5.13.1 Checking the electric gear shift

1 Check the cable connections for damage and corrosion and ensure they are firmly in position.

⇨ If cable connections are loose, damaged or corroded, contact your specialist dealer.

8.5.13.2 Checking the mechanical gear shift

1 Change gear a number of times. Check whether the Bowden cables get stuck or they make scraping noises.

2 Check the physical condition of the Bowden cables for visible damage and check to see if wire strands are broken.

⇨ Have defective Bowden cables replaced. Contact specialist dealer.

8.5.13.3 Checking the derailleur gears

The chain is tensioned by the rear derailleur in bicycles with derailleur gears.

1 Place the bicycle on stand.

2 Check to see if the chain is sagging.

3 Gently press the rear derailleur forwards to check whether it moves and whether it goes back into position by itself.

⇨ If the chain is sagging or the rear derailleur does not go back into position by itself, contact your specialist dealer.

4 Check that there is clearance between the chain tensioner and spokes.

⇨ If there is no clearance or the chain scrapes against the spokes or tyres, contact your specialist dealer.

5 Check that there is clearance between the chain or rear derailleur and spokes.

⇨ If there is no clearance or the chain scrapes against the spokes, contact your specialist dealer.

8.5.13.4 Checking the hub gear

In the case of bicycles with a hub gear or back-pedal brake, the chain or the belt is tensioned by an eccentric bearing or movable fork end in the bottom bracket axle. Special tools and specialist knowledge are required to tension the chain. Contact specialist dealer.

✓ Remove the chain guard on bicycles with a circumferential chain guard.

1 Place the bicycle on stand.

2 Check the chain or belt tension in three or four positions, turning the crank a full revolution.

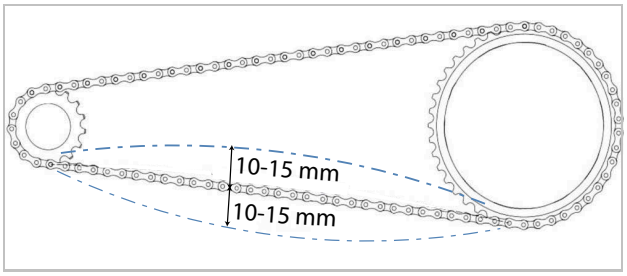

Figure 189: Checking the chain tension (example): 5 mm upwards, 10 mm downwards = 15 mm deviation

3 If the chain or the belt can be pushed more than 2 cm, the chain will need to be re-tensioned. Contact specialist dealer.

⇨ If the chain or belt can only be pushed up and down less than 1 cm, you will need to slacken the chain or belt slightly. Contact specialist dealer.

⇨ The ideal chain and belt tension has been achieved if the chain can be pushed between a maximum of 10 and 15 mm in the middle between the sprocket and the toothed wheel. The crank must also turn without resistance.

8.5.13.5 Adjusting the cable-operated gear shift, dual-cable

▶ For a smooth gear shift, adjust the **adjusting sleeves** underneath the chain stay on the frame.

▶ The shift cable has around 1 mm play when it is pulled out gently.

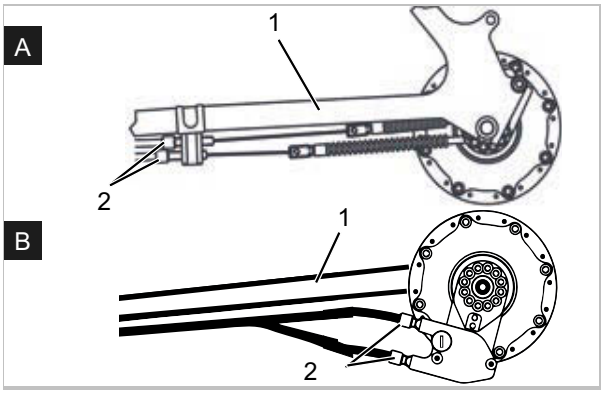

Figure 190: Adjusting sleeves (2) on two alternative versions (A and B) of a dual-cable, Bowden-cable-operated gear shift on the chain stay (1)

8.5.13.6 Checking kickstand stability

1 Place the bicycle on a slight elevation of 5 cm.

2 Extend kickstand.

3 Jolt bicycle to check stability.

⇨ If bicycle topples over, tighten screws or change height of the kickstand.

9 Inspection and maintenance

⚠WARNING **Injury due to damaged brakes**

Special tools and specialist knowledge are required to repair the brakes. Incorrect or unauthorised assembly can damage the brakes. This may lead to an accident with serious injuries.

- ▶ Only specialist dealers may carry out repairs on brakes.
- ▶ Only carry out work or changes, such as dismantling, sanding or painting, which are permitted and described in the brake operating instructions.

⚠WARNING **Injury to the eyes**

Problems may arise if the settings are not made properly and you may sustain serious injuries as a result.

- ▶ Always wear safety glasses during inspection and maintenance work.

⚠CAUTION **Crash and falling caused by unintentional activation**

There is a risk of injury if the electric drive system is activated unintentionally.

- ▶ Remove the battery before inspection or maintenance.

⚠CAUTION **Crash caused by material fatigue**

If the service life of a component has expired, the component may suddenly fail. This may cause a crash with injuries.

- ▶ Have the specialist dealer carry out basic cleaning of the pedelec every six months, preferably at the same time as the required servicing work.

⚠CAUTION **Hazard for the environment due to toxic substances**

The brake system contains toxic and environmentally harmful oils and lubricants. Such fluids will contaminate if they enter the sewers or groundwater.

- ▶ Dispose of lubricants and oils left over after repairs in an environmentally responsible way in accordance with statutory regulations.

Notice The motor is maintenance-free and only qualified specialist personnel may open it.

- ▶ Never open the motor.

9.1 Initial inspection

After 200 km or 4 weeks after purchase

Vibrations produced while riding can cause screws and springs that were tightened when pedelec was manufactured to settle or come loose.

- ▶ Arrange an appointment for the initial inspection intermediately when purchasing the pedelec.
- ▶ Have the initial inspection entered and stamped in the maintenance book.

9.2 Carrying out the initial inspection

⚠WARNING **Crash caused by loose screws**

Incorrectly fastened screws may come loose due to impact. The stem may no longer be firmly fixed in its position as a result. This will result in a crash with injuries.

- ▶ Check the handlebars and the stem quick release system are firmly in position after the first two hours of riding.

⚠WARNING Crash caused by loose screws, springs or quick releases

Vibrations produced while riding can cause screws, springs and quick releases that were tightened when pedelec was manufactured to jam or come loose.

- ▶ Check quick release system is fixed in position.
- ▶ Check all tightening torques of screws and screw connections.

9.3 Major inspection

Every six months

You must have your specialist dealer perform a major inspection every six months as a minimum. This is the only way to ensure that the pedelec remains safe and fully functional.

The tasks require technical expertise, special tools and special lubricants. The pedelec may become damaged if the stipulated major inspection and procedures are not carried out. This is why only specialist dealers may carry out the major inspection.

- ▶ Contact your specialist dealer and arrange an appointment.
- ▶ Enter and stamp major inspection tasks in the maintenance book.

9.4 Component-specific maintenance

High-quality components require extra maintenance. The tasks require technical expertise, special tools and special lubricants. The pedelec may become damaged if the stipulated maintenance intervals and procedures are not observed. This is why only specialist dealers may carry out maintenance.

Correct maintenance on the fork not only guarantees a long service life, but also ensures optimal performance.

Each maintenance interval shows the maximum cycling hours for the required type of maintenance that the component manufacturer recommends.

- ▶ Optimise performance with shorter maintenance intervals, depending on use, terrain and environmental conditions.

Inspection and maintenance intervals for suspension fork		
SR SUNTOUR suspension fork		
☐	Maintenance 1	Every 50 hours
☐	Maintenance 2	Every 100 hours
FOX suspension fork		
☐	Maintenance	Every 125 hours or once a year
ROCKSHOX suspension fork		
☐	**Maintenance of stanchions for**: Paragon™, XC™ 28, XC 30, 30™, Judy®, Recon™, Sektor™, 35™, Bluto™, REBA®, SID®, RS-1™, Revelation™, PIKE®, Lyrik™, Yari™, BoXXer	Every 50 hours
☐	**Maintenance of spring and damper unit for**: Paragon, XC 28, XC 30,30 (2015 and earlier), Recon (2015 and earlier), Sektor (2015 and earlier), Bluto (2016 and earlier), Revelation (2017 and earlier), REBA (2016 and earlier), SID (2016 and earlier), RS-1 (2017 and earlier), BoXXer (2018 and earlier)	Every 100 hours
☐	**Maintenance of spring and damper unit for:** 30 (2016+), Judy (2018+), Recon (2016+), Sektor (2016+), 35 (2020+), Revelation (2018+), Bluto (2017+), REBA (2017+), SID (2017+), RS-1 (2018+), PIKE (2014+), Lyrik (2016+), Yari (2016+), BoXXer (2019+)	Every 200 hours

Inspection and maintenance intervals for seat post		
by.schulz suspension seat post		
☐	Maintenance	After the first 250 km; every 1,500 km after that
eightpins suspension seat post		
☐	Clean wiper	20 hours
☐	Clean slide bushing	40 hours
☐	Replace slide bushing, wiper and felt strip	100 hours
☐	Seal service for gas pressure spring	200 hours
FOX suspension seat post		
☐	Maintenance	Every 125 hours or once a year
KINDSHOCK suspension seat post		
☐	Maintenance	Every 6 months
ROCKSHOX dropper post		
☐	Venting of remote control lever and/or maintenance of lower seat post unit for: Reverb™ A1/A2/B1, Reverb Stealth A1/A2/B1/C1	Every 50 hours
☐	Detach lower seat post, clean brass pins, check and replace if necessary and apply new grease for Reverb AXS™ A1	Every 50 hours
☐	Venting of remote control lever and/or maintenance of lower seat post unit for: Reverb B1, Reverb Stealth B1/C1, Reverb AXS™ A1	Every 200 hours
☐	Complete maintenance of seat post for: Reverb A1/A2, Reverb Stealth A1/A2	Every 200 hours
☐	Complete maintenance of seat post for: Reverb B1, Reverb Stealth B1	Every 400 hours
☐	Complete maintenance of seat post for: Reverb AXS™ A1, Reverb Stealth C1	Every 600 hours
SR SUNTOUR dropper seat post		
☐	Maintenance	Every 100 hours or once a year
All other suspension seat posts		
☐	Maintenance	Every 100 hours

Inspection and maintenance intervals for rear frame damper		
RockShox rear frame damper		
☐	Service the air chamber assembly	Every 50 hours
☐	Service the damper and spring	Every 200 hours
FOX rear frame damper		
☐	Maintenance	Every 125 hours or once a year
SR SUNTOUR rear frame damper		
☐	Complete shock absorber service, including damper reassembly and air seal replacement	Every 100 hours

Inspection and maintenance intervals for motor		
pinion C1.12, C1.9XR, C1.6		
☐	Maintenance 1 Check shift cables, outer sleeves, chains/belts, chainring and sprockets or belt sprockets for wear; replace if necessary. Check shift cables to ensure they are tensioned and move easily. Adjust or replace if necessary. Open shift box. Clean cable pulley, slide surfaces, gear box interior, epicyclic wheels and similar thoroughly and grease generously. Check and tighten all screw connections except gear box screws to ensure they are firmly in place and fasten with correct tightening torque.	Every 500 km
☐	Maintenance 2 Oil change	Every 10,000 km or once a year
pinion E1.12, E1.9		
☐	Oil change	Every 10,000 km

Inspection and maintenance intervals for hub		
SHIMANO 11-speed hub		
☐	Internal oil change and maintenance	1,000 km after start of use, then every 2 years or 2,000 km
All other SHIMANO gear hubs		
☐	Lubricate internal components	Once a year or every 2,000 km
ROHLOFF Speedhub 500/14		
☐	Clean cable box and grease cable drum interior	Every 500 km
☐	Oil change	Every 5,000 km or at least once a year
pinion		
☐	Maintenance 1 Check shift cables, outer sleeves, chains/belts and sprockets or belt sprockets for wear; replace if necessary. Check shift cables to ensure they are tensioned and move easily. Adjust or replace if necessary. Open shift box. Clean cable pulley, slide surfaces, gear box interior, epicyclic wheels and similar thoroughly and grease generously. Check and tighten all screw connections except gear box screws to ensure they are firmly in place and fasten with correct tightening torque.	Every 500 km
☐	Maintenance 2 Oil change	Every 10,000 km

10 Troubleshooting, fault clearance and repair

10.1 Preventing pain

The pedelec is both a means of transport and a piece of sports equipment that promotes health.

After the first few rides, you may experience sore muscles the next day. However, permanent pain should never occur during or after a ride.

The most common complaints are:

- Sitting discomfort
- Pain in hips
- Backache
- Pain in shoulders and nape of neck
- Numb or aching hands
- Pain in upper thigh
- Pain in the knee
- Pain in the foot

If you suffer from one or more of the complaints above, take the following action steps:

1 Check the correct adjustment of all components. In most cases, however, pain after pedelec rides is due to a lack of training and components set incorrectly or components that are not adjusted to the rider's physique.

2 Consult a doctor as soon as possible and talk openly about the complaints. Pain may be a sign of medical problems that need to be treated.

3 If the doctor does not diagnose a medical condition, visit a gym, sports trainer or physiotherapist. Personalised stretching or musculature strengthening exercises must be supervised to ensure they are performed correctly.

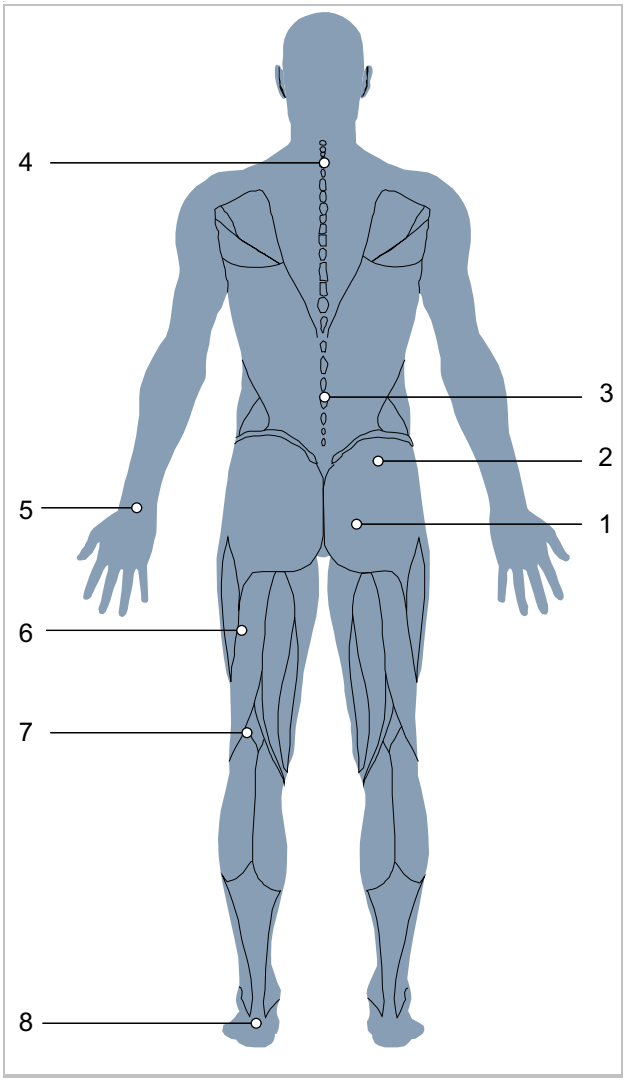

Figure 191: Recognised pain due to lack of training and/ or incorrect component adjustment

10.1.1 Sitting discomfort

Around 50% of all pedelec riders experience sitting discomfort:

- Pressure pain in the sitting bones
- Pain in the lower back
- Pressure pain and numbness in perineal region.

Solution

- Adopt an optimal riding position (see Section 6.5.2).
- Adjust the saddle height and tilt (see Section 6.5.4).
- Wear cycling shorts and use chamois cream (see Section 6.12).
- Use an ergonomically adjusted saddle (see Section 6.5.4).

- Ride standing up now and again.

10.1.2 Pain in hips

Lower back pain is often not caused by the back muscles, but by the iliopsoas muscle instead. This muscle is part of the inner hip musculature and flexes the hip. It is attached to the thigh bone and reaches up to the spine. Pain can occur in the back if this muscle is strained too much or shortened.

Solution

- Strengthening exercises for the iliopsoas muscle
- Stretching exercises for hip flexors and extensors.

10.1.3 Backache

Riding a pedelec strengthens the back musculature. The greater the saddle-to-bar drop is, the greater the strain on the back musculature is. At the beginning, a posture where you lean too far forward can lead to pain in the back, arms and wrists. The abdominal muscles are the counterpart to the back muscles and stabilise the pelvis and the back. Back pain is thus often caused by weak abdominal muscles.

Solution

- Contact specialist dealer. You need to adopt a more upright sitting position (see Section 6.5.3).

- Stretching exercises for the back and abdominal muscle ligaments and moderate bicycle training will lengthen the tendons and build new back and abdominal muscles.

The desired position can be adopted after a period of training.

10.1.4 Pain in shoulders and nape of neck

The weight of the upper body places a strain on the shoulders due to the bent-forward posture on the pedelec. The more stretched the position is, the more strain there is on the shoulders.

The specific posture adopted is often the source of pain. Pedelec riders often extend their arms. Impacts such as those occurring on bumpy roads are thus transmitted to the shoulders without suspension. This causes severe pain.

Another source of pain is a hunchback. Due to the posture adopted, the neck needs to be extended backwards excessively so that the rider can look forwards. This causes strain in the neck and shoulder muscles.

Solution

- A more upright riding position will immediately reduce pain.
- Always bend elbows slightly.
- ⇨ The elbow joint will not block. The arms cushion impacts.

- Adjust the handlebars (see Section 6.5.5).
- Always adopt an optimal riding position (see Section 6.5.3).

10.1.5 Numb or aching hands

Your hands are one of the three points of contact when you ride a pedelec. The hands transmit the weight of the upper body to the handlebars. In the upright Holland position, there is almost no weight applied whereas body weight is at its highest in the sports position. The force is applied to a small area on the handle, meaning the pressure load on the hands is very high. Hands are highly sensitive and can bear a maximum of 20% of body weight during prolonged exposure to load.

Solution

- Position handles perfectly (see Section 6.5.5.1, 6.5.5.2 and 6.5.8)
- Move hands and arms while riding (see Section 6.15)
- Use padded cycling gloves (see Section 2.15)
- Optimise handles (see Section 6.5.7).

10.1.6 Pain in upper thigh

Pain in the upper thigh is usually due to muscular problems. A muscular imbalance between the extensors, flexors and adductors can cause this pain.

Solution

- Increasing assistance on the pedelec will bring immediate relief.

- Targeted exercises to correct imbalance and shortening of the thigh muscles.
- Stretching exercises for the thigh muscles.

10.1.7 Knee pain

Pedelec riding is a sport that is easy on the knee joints and is recommended for beginners. Very powerful forces are transmitted from the thigh to the foot via the knee when pedalling. As a result, the tendons and cartilage in the knee are subjected to great stress.

Pain on the inside and outside of the knee is often caused by incorrect adjustment of the click system and the foot being out of position as a consequence. Pain in the lower part of the knee usually stems from an improper riding position.

Cold weather can also cause knee pain. Tendons are less elastic at low temperatures and thus rub against the knee more.

If the knee is out of position, the cartilage becomes very worn. Muscular imbalances or ligaments that are too short can increase this effect. Pain on the top of the kneecap often indicates a muscular imbalance. Pain under the kneecap is usually related to excessive pressure in the knee joint and consequential irritation to the patellar tendon.

Solution

- Contact specialist dealer. Have the pedelec adjusted (see Section 6.5). Then measure the wheel.
- Avoid cold.

- Get imbalances under control through stretching exercises, strengthening the muscles and Blackroll training.

10.1.8 Pain in the foot

Your feet are one of three points of contact when you ride a pedelec. Feet transmit force from the upper thigh to the pedal, thus driving the pedelec. In the process, your feet are subjected to between 100% and, during jumps, even up to 1,000% of your body weight.

Foot pain often arises when the saddle is too low or the foot is placed incorrectly on the pedal.

Unsuitable shoes can also be the cause of pain in the feet.

Solution

- Wear sturdy shoes which are not too tightly laced (see Section 2.5).
- Position feet correctly on the pedals (see Section 6.13).
- Adjust the saddle height to an optimum position (see Section 6.5.4).

More info on Kiox 300
Description
Adjusting
Use
Cleaning
Maintenance
Error solution

10.2 Kiox 300 and Kiox 500 drive system

The control panel indicates whether a critical or less critical error has arisen in the drive system.

The error messages generated by the drive system can be read in the eBike Flow app and by the bicycle dealer.

The rider can use a link in the eBike Flow app to display all information on errors and assistance on eliminating errors.

10.2.1 Drive system or on-board computer does not start up

If the on-board computer and/or the drive system do not start up, proceed as follows:

1 Check whether the battery is switched on. If not, start the battery.

⇨ Contact your specialist dealer if the battery level indicator LEDs do not light up.

2 If the LEDs on the Battery Level indicator light up, but the drive system does not start, remove the battery.

3 Insert the battery.

4 Start the drive system.

5 If the drive system does not start up, remove the battery.

6 Clean all the contacts with a soft cloth.

7 Insert the battery.

8 Start the drive system.

9 If the drive system does not start up, remove the battery.

10 Fully charge the battery.

11 Insert the battery.

12 Start the drive system.

13 If the drive system does not start, press the **on-off button (control panel)** for at least 8 seconds.

14 If the drive system does not start after about 6 seconds, press the **on-off button (control panel)** for at least 2 seconds.

15 Contact your specialist dealer if the drive system won't start.

10.2.2 Errors in assistance function

Symptom	(Possible) cause	Remedy
Assistance is not available.	Is the battery charged sufficiently?	**1** Check battery is charged. **2** Recharge the battery if it is almost flat.
	Is the system switched on?	▶ **Press on-off button (battery)**. ⇨ The drive system starts.
	Is the level of assistance set to [OFF]?	**1** Set the assistance mode to a different level of assistance than [OFF]. **2** Contact your specialist dealer if you still feel that the no assistance is being supplied.
	The rechargeable battery, on-board computer or assistance switch may be connected incorrectly, or one or more of them may have a problem.	▶ Contact specialist dealer.
	Are the pedals being pushed?	The pedelec is not a motorbike. ▶ Push the pedals.
	Is the speed too high?	The electronic gear assistance is only active up to a maximum speed of 25 km/h. ▶ Check on-board computer indicators.
	Is the lock function activated?	▶ Use suitable on-board computer.
	The battery may become too hot during rides at high temperatures, up long inclines or when carrying a heavy load for a long time.	**1** Switch off the drive system. **2** Leave pedelec to cool down. **3** Start the drive system.
The assisted journey distance is too short.	Is the battery fully charged?	**1** Check charge level. **2** Recharge the battery if it is almost flat.
	The battery does not perform as well in winter weather.	This does not indicate a problem.
	The journey distance can be shorter, depending on the road conditions, the gear level and the entire light usage time.	This does not indicate a problem.
	The battery is a consumable. Repeated charging and long periods of use cause the battery to degrade (loss of power).	If the distance covered with a fully charged battery has become shorter, the battery may be affected. ▶ Replace old battery with new one.
It is difficult to pedal.	Are the tyres pumped to an adequate pressure?	**1** Pump up tyres.
	Is the level of assistance set to [OFF]?	**1** Set level of assistance to [HIGH], [STD], [ECO] or [AUTO]. **2** Contact your specialist dealer if the pedals are still stiff.
	Is the battery fully charged?	**1** Check charge level. **2** Recharge the battery if it is almost flat.
	Have you switched on the system with your foot on the pedal?	**1** Switch system on again without applying pressure to the pedal. **2** Contact your specialist dealer if the pedals are still stiff.

Table 27: Error solution for assistance system

10.2.3 Battery errors

Symptom	(Possible) cause	Remedy
The battery discharges very quickly.	The battery may be at the end of its useful life.	▶ Replace old battery with new one.
The battery cannot be recharged.	Is the charger mains plug firmly connected to the socket?	**1** Disconnect the charger mains plug and plug it in again. **2** Start charging. **3** If the battery still won't recharge, contact your specialist dealer.
	Is the charger plug firmly connected to battery?	**1** Disconnect the charger plug and plug it in again. **2** Start charging. **3** If the battery still won't recharge, contact your specialist dealer.
	Is the adapter firmly connected to the charger plug or the battery's charging port?	**1** Connect the adapter firmly to the charger plug or the battery charging port. **2** Start charging. **3** If the battery still won't recharge, contact your specialist dealer.
	Is the connection terminal for the charger, charger adapter or batteries dirty?	**1** Wipe with a dry cloth to clean the connection terminals. **2** Start charging. **3** If the battery still won't recharge, contact your specialist dealer.
The battery does not start charging when the charger is connected.	The battery may be at the end of its useful life.	▶ Replace old battery with new one.
The battery and charger become hot.	Has the battery or charger temperature exceeded the operating temperature range?	**1** Interrupt charging process. **2** Leave battery and charger to cool down. **3** Start charging. ⇨ If the battery becomes too hot to touch, there might be a problem with the battery. **4** Contact specialist dealer.
The charger is hot.	If the charger is used continuously to charge batteries, it may become hot.	**1** Interrupt charging process. **2** Leave charger to cool down. **3** Start charging.
The LED on the charger does not light up.	The LED on the charger will go out when the battery is fully charged.	This is not a malfunction.
	Is the charger plug firmly connected to battery?	**1** Check connection for any contaminants. **2** Insert charger plug. **3** If the battery still won't recharge, contact your specialist dealer.
	Is the battery fully charged?	**1** Disconnect charger mains plug. **2** Insert mains plug again. **3** Start charging. **4** Contact your specialist dealer if the LED on the charger still doesn't light up.
The battery cannot be removed.		▶ Contact your specialist dealer.
The battery cannot be inserted.		▶ Contact specialist dealer.
Fluid is leaking from the battery.		▶ Observe all the warnings in Section 2 Safety.

Table 28: Error solution for battery

Symptom	(Possible) cause	Remedy
There is an unusual smell.		**1** Remove from the battery immediately. **2** Contact the fire service immediately. **3** Observe all the warnings in Section 2 Safety.
Fumes are emitted from the battery.		**1** Remove from the battery immediately. **2** Contact the fire service immediately. **3** Observe all the warnings in Section 2 Safety.

Table 28: Error solution for battery

10.2.4 Display screen errors

Symptom	(Possible) cause	Remedy
No data are shown on the display screen if you press the **on-off button (battery)**.	The battery charge level may be insufficient.	**1** Charge the battery. **2** Switch on the power.
	Is the power switched on?	▶ Press the **on-off button (battery)** to switch the power on.
	Is the battery charged?	If the battery is fitted to the pedelec and is being charged, it cannot be switched on. ▶ Interrupt charging.
	Is the connector fitted to the power cable correctly?	**1** Check whether the connector is fitted to the power cable correctly. **2** If the connector is fitted correctly, contact your specialist dealer.
	A component may be connected which the system is unable to recognise.	▶ Contact specialist dealer.
The gear level is not shown on the display screen.	The gear level is only shown if the electronic gear shift is used.	**1** Check that the power cable connector has not been disconnected. **2** If this is not the case, contact your specialist dealer.
The settings menu cannot be opened while you are pedalling.	The product is designed in such a way that the Settings menu cannot be opened if the system detects that the pedelec is moving. This is not a malfunction.	**1** Stop pedelec. **2** Change settings when stationary only.
The lock function cannot be set up or switched off.	It may be a firmware error.	▶ Contact specialist dealer.
The connect account has been deleted or deactivated and the lock function is still activated.	…	▶ Contact specialist dealer.

Table 29: On-board computer error solution

10.2.5 Lighting does not work

Symptom	(Possible) cause	Remedy
Front lamp or rear lamp does not go on, even when the switch is pressed.	The default settings in the electric drive system have probably been configured incorrectly.	**1** Take pedelec out of service immediately. **2** Contact specialist dealer.
	The light is defective.	

Table 30: Lighting fault solution

10.2.6 BOSCH System Controller

10.2.6.1 On-board computer

The on-board computer indicates whether a critical or less critical error has arisen in the drive system.

The error messages generated by the drive system can be read in the eBike Flow app and by the specialist dealer.

The rider can use a link in the eBike Flow app to display information on errors and assistance on eliminating errors.

Critical errors

The level of assistance indicator and battery level indicator (control panel) flash red to signal critical errors.

Flash sequence	Meaning
	LED Remote is flashing red: in the case of a critical error

▶ Press on the **mode button** on the System Controller or the **select button** on the Mini Remote.

⇨ The error code is acknowledged. The level of assistance indicator and the battery level indicator (control panel) display the colour of the configured level of assistance and the battery level continuously again.

You can eliminate errors yourself using the following table. Contact your specialist dealer if the problem persists.

Code	Method of resolution
660001 660002	▶ Do not charge battery and do not use again. Contact specialist dealer.
890000	**1** Acknowledge error code. **2** Switching off the electric drive system (see Section 7.16.2). **3** Switching on the electric drive system (see Section 7.16.1). If the problem persists: **4** Acknowledge error code. **5** Install software update. **6** Switching off the electric drive system (see Section 7.16.2). **7** Switching on the electric drive system (see Section 7.16.1). If the problem persists: ▶ Contact specialist dealer.

Table 31: List of on-board computer error messages

Less critical errors

The level of assistance indicator (control panel) will flash orange in the event of less critical errors.

Flash sequence	Meaning
	LED Remote will flash orange in the case of less critical errors.

▶ Press on the **mode button** on the System Controller or the **select button** on the Mini Remote.

⇨ The error code is acknowledged. The level of assistance indicator and the battery level indicator (control panel) display the colour of the configured level of assistance and the battery level continuously again.

You can eliminate errors yourself using the following table when necessary. Contact your specialist dealer if the problem persists.

Code	Description	Method of resolution
523005 514001 514002 514003 514006	The sensors do not detect the magnetic field properly.	▶ Check that the magnet wasn't lost while riding. ▶ If a magnet sensor is used, check that the sensor and magnet have been fitted properly. In doing so, ensure that the cable to the sensor is not damaged. ▶ If a rim magnet is used, ensure that there are no magnetic field interference near the drive unit.

Table 32: List of on-board computer error messages

10.2.6.2 Battery

The battery is protected against deep discharge, overcharging, overheating and short circuits by Electronic Cell Protection (ECP). In the event of a hazard, a protective circuit switches the battery off automatically. If a fault is detected on the battery, the LEDs will flash on the battery level indicator.

Description	Method of resolution
Code:	
If the battery is outside its charging temperature range, three LEDs will flash on the battery level indicator.	**1** Disconnect charger from battery. **2** Leave battery to cool down or warm up. **3** Contact your specialist dealer if the problem persists.
Code:	
If a battery fault is detected, two LEDs will flash on the battery level indicator.	▶ Contact specialist dealer.
Code:	
No LEDs will light up if there is no power.	**1** Check all plug connections. **2** Check contacts on the battery for dirt. Clean the contacts carefully if needed. **3** Contact your specialist dealer if the problem persists.

Table 33: List of battery error messages

10.2.7 Correcting disc brake faults

Symptom	(Possible) cause	Remedy
Ringing and unusual sounds from the disc brake.	Riding on tarmac with off-road tyres.	▶ Contact specialist dealer. Fit a city or trekking tyre.
Low braking power from the disc brake.	Dirty or greasy brake disc.	▶ Clean brake disc thoroughly with white spirit or brake cleaner.
	Worn brake disc.	▶ Contact specialist dealer. New brake disc.
	Worn brake lining.	▶ Contact specialist dealer. New brake linings.
	Brake lining vitrification.	
Metallic noises from disc brake.	Worn brake linings.	▶ Contact specialist dealer. New brake linings and brake disc.
Spongy, soft or poor pressure point in disc brakes.	Brake calliper fitted incorrectly, brake disc loose, brake disc or brake lining worn or brake system leaking.	▶ Contact specialist dealer.
Noises when a disc brake is applied.	Dirt.	**1** Clean brake disc and brake thoroughly. **2** If the problem is not solved, contact your specialist dealer.
	Worn or incorrect brake linings.	▶ Contact specialist dealer. New brake linings and brake discs.
	Wheel, hub or axle fitted incorrectly.	▶ Contact specialist dealer. Check brake system and wheel assembly.
	Brake calliper and/or brake disc fitted incorrectly.	
	Incorrect torques.	
	Brake disc damaged by side impact.	
	Vitrified brake linings.	
	Brake system leaking.	
	Incorrect brake mount height.	

Table 34: Disc brake error solution

10.2.8 Problems with the Rohloff hub gear

Symptom	(Possible) cause	Remedy
A noise is heard when the pedals are turning.	All gear speeds except 1.	▶ This is not a malfunction.
A noise is heard when the pedelec is pushed backwards.	All gear speeds except 1.	
Noises and vibrations occur on switching on.	All gear speeds.	
Gear shifting feels different, depending on the gear speed.	All gear speeds.	
A noise is heard whenever the rider isn't pedalling while riding.	All gear speeds.	
The gears are difficult to engage.	The cable has not been installed properly.	▶ Contact specialist dealer.
	The gear shift unit has been set to the override state.	▶ Contact specialist dealer. (readjust gear shift unit).
Gears cannot be engaged smoothly.	Shift cable tension setting not correct.	**1** Carefully pull the *adjusting sleeve* away from the shifter housing, turning it as you do so. **2** Check the gear shift functions properly after each adjustment.
The gear speed cannot be changed.	The cable was not set correctly.	▶ Contact specialist dealer. (Reset gear shift unit; check whether the gear speed can be changed when the wheel is detached from the frame.)
Strange noises occur.	When switching gears.	▶ Contact specialist dealer.
	When pedalling.	
The gear speed shown on the indicator differs from the speed in the hub.	The cable was not set correctly.	▶ Contact specialist dealer.
	The internal unit has a defect.	
The hub rotates with difficultly only or does not rotate smoothly.	The cone is firmly positioned.	▶ Contact specialist dealer.
	The internal unit has a defect.	▶ Contact specialist dealer.
A rattling noise is heard when rider pedals.	The section around the cone is damaged.	▶ Contact specialist dealer.
Free rotation is not smooth if the rider does not pedal.		▶ Contact specialist dealer.
The brakes are too sensitive.		▶ Contact specialist dealer.
The brakes are not strong enough.		▶ Contact specialist dealer.
The rider needs to push the pedals too far back before the brakes engage.		▶ Contact specialist dealer.
The wheels block if the pedelec is pushed backwards.		▶ Contact specialist dealer.

Table 35: Error solution for limit stop

Symptom	(Possible) cause	Remedy
Strange noises occur when the brakes are applied.		▶ Contact specialist dealer.
Rotation feels stiff during free rotation.		▶ Contact specialist dealer.
Chain jumps between the gearwheels when gear is changed.	Gearwheels and/or chain worn.	▶ Contact specialist dealer. New chain, gearwheels or hub.

Table 35: Error solution for limit stop

10.2.9 Correcting freewheel faults

Symptom	(Possible) cause	Remedy
Freewheel blocked.	Cover forgotten after fitting.	▶ Contact specialist dealer. Check installation correct.
	After installation, socket was compressed by over-tightening the quick-release axle.	▶ Contact specialist dealer. Measure the length of the socket. If the socket is shorter than 15.4 mm, replace socket.
Freewheel slips or does not lock into place.	After maintenance: Too much or wrong grease on the toothed discs.	▶ Contact specialist dealer. Remove hub. Clean and grease toothed disc.
	Toothed discs are worn.	▶ Contact specialist dealer. Replace toothed disc.
	One or both springs were forgotten after fitting.	▶ Contact specialist dealer. Check installation correct.
	One or both toothed discs are fitted the wrong way round after installation.	▶ Contact specialist dealer. Check installation correct.
Hub has axial clearance.	Ball bearings are worn.	▶ Contact specialist dealer. Replace ball bearings.
	One or both toothed discs are fitted the wrong way round after installation.	▶ Contact specialist dealer. Check installation correct.
Hub is stiff when turned.	Ball bearings are worn.	▶ Contact specialist dealer. Replace ball bearings.
	Ball bearings have been driven in too firmly after installation.	▶ Contact specialist dealer. Check installation correct.
	Installation sequence for ball bearings not observed.	▶ Contact specialist dealer. Check installation correct.
Hub makes noise.	Ball bearings are worn.	▶ Contact specialist dealer. Replace ball bearings.
Cassette caused notches on the freewheel body.	Steel cassette is working its way into the aluminium bar on the freewheel body.	▶ Contact specialist dealer. Remove notches on the cassette surface with a file.
Freewheel body is stiff when turned.	Ball bearings in the freewheel body are worn.	▶ Contact specialist dealer. Replace freewheel body.
Freewheel is too loud or too quiet.	Perception of freewheel noise is subjective. Some pedelec riders enjoy a loud freewheel sound while others prefer a quieter one.	▶ This is not a malfunction. The amount of grease between the toothed discs may have an effect on the freewheel noise. Less grease increases freewheel noise but also causes greater wear.

Table 36: Fault solution for freewheel

10.2.10 Correcting lighting faults

Symptom	(Possible) cause	Remedy
The front light or rear light does not go on, even when the switch is pressed.	The default settings in the electric drive system have probably been configured incorrectly. The light is defective.	**1** Take pedelec out of service immediately. **2** Contact specialist dealer.

Table 37: Lighting fault solution

10.2.11 Correcting faults in tyres

Symptom	(Possible) cause	Remedy
Valve torn off.	Presta valve used with a sizeable valve hole. The hole's metal edge separates the valve stem from the tube.	▶ Contact specialist dealer. Fit another type of valve.

Table 38: Fault solution for tyres

10.2.12 Correcting control seat post faults

Symptom	(Possible) cause	Remedy
Seat post clicks or creaks.	Protective layer missing.	▶ Service seat post (see Section 7.4.9).
Seat post deflects and bobs periodically.	Incorrect pre-tensioning.	▶ Adjust pre-tensioning so that the suspension seat post does not deflect under the rider's weight when at rest.
Seat post with remote control does not rise or lower.	Bowden cable is not tensioned correctly.	▶ Adjust the Bowden cable with the setting screw (1) on the remote control. 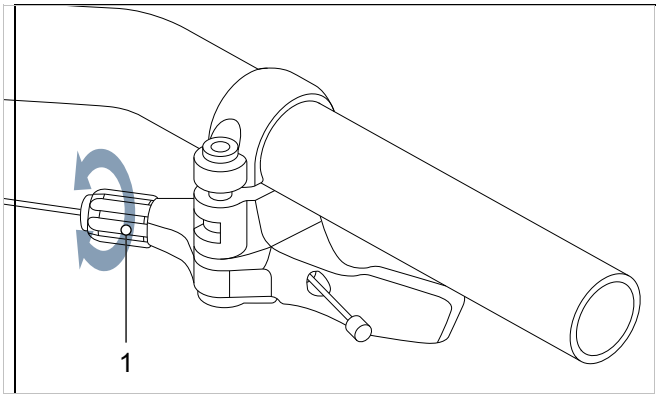 Figure 192: Remote control with setting screw (1) • Reduce sensitivity: turn the setting screw clockwise. • Increase sensitivity: turn setting screw anti-clockwise.

Table 39: Fault solution for the seat post

10.2.13 Correcting other faults and errors

Symptom	(Possible) cause	Remedy
Two beeps will sound if a switch is pressed but the switch cannot be operated.	Pressed switch mode has been deactivated.	▶ This is not a malfunction.
Three beeps are sounded.	A fault or warning has occurred.	▶ This occurs when a warning or an error is shown on the on-board computer. Follow the instructions for the code in Section 6.2 System Messages.
If an electronic gear shift is used, pedal assistance becomes less effective when the gear is changed.	This is because the computer sets the pedal assistance to the optimum level.	▶ This is not a malfunction.
A noise can be heard after switching.		▶ Contact specialist dealer.
It is normal to hear a noise coming from the rear wheel when cycling as normal.	The gear shift setting may not have been made properly.	▶ Contact specialist dealer.
If the pedelec is brought to a stop the pedelec, the gear transmission does not switch to the position pre-configured in the functional feature.	You may have applied too much pressure on the pedals.	▶ Press on the pedals gently only to make it easier to change the transmission.

Table 40: Other drive system errors

10.2.14 Replacing pedelec components if lock function is installed

10.2.14.1 Replacing a smartphone

1 Install Bosch eBike connect app on the new smartphone.

2 Log on using the same account which was used to activate the lock function.

3 Connect on-board computer with the smartphone while the on-board computer is in use.

⇨ The lock function is shown as set up in the BOSCH eBike Connect app.

10.2.14.2 Replacing the on-board computer

▶ Connect on-board computer with the smartphone while the on-board computer is in use.

⇨ The lock function is shown as set up in the BOSCH eBike Connect app.

10.2.14.3 Activating the lock function after motor replacement

✓ The lock function is displayed as deactivated in the eBike Connect app when the motor has been replaced.

1 Open the <My eBike> menu item in the eBike Connect app.

2 Push the <Lock function> slider to the right.

⇨ The drive unit assistance can now be deactivated by removing the on-board computer.

11 Recycling and disposal

This device is marked according to the European Directive 2012/19/EU on waste electrical and electronic equipment – WEEE and the European Directive 2006/66/EC on accumulators.

The directive provides the framework for returning and recycling used devices across the EU. Consumers are legally required to return all used batteries of any type. It is forbidden to dispose of batteries in domestic waste.
The battery manufacturer is legally obliged to take back used and old batteries free of charge according to Section 9 German Batteries Act. The pedelec frame, battery, motor, on-board computer and charger are recyclable materials. You must dispose of and recycle them separately from domestic waste in compliance with the applicable statutory regulations. Collecting and recycling items separately safeguards reserves of raw materials and ensures that all the regulations on health and environmental protection are observed when recycling the product and/or the battery.

▶ Never dismantle the pedelec, battery or charger for disposal.

The pedelec, the on-board computer, the unopened and undamaged battery and the charger can be returned to any specialist dealer free of charge. Further disposal options may be available, depending on the region.

▶ Store the individual parts of the decommissioned pedelec in a dry place, free from frost, where they are protected from direct sunlight.

12 Documents

12.1 Operating instructions for pinion

13 Glossary

Bicycle for young adults

Source: ISO 4210-2: pedelec designed for use on public roads by a young adult whose weight is less than 40 kg, with maximum saddle height of 635 mm or more and less than 750 mm (see ISO 4210).

Brake lever

Source: EN 15194:2017: lever used to apply the brake.

Braking distance

Source: EN 15194:2017: distance travelled by a pedelec between the commencement of braking and the point at which the pedelec comes to rest.

Cargo bike

Source: DIN 79010: pedelec mainly designed to carry goods.

CE marking

Source: Directive on Machinery: the manufacturer uses the CE marking to declare that the pedelec complies with the applicable requirements.

City and trekking bicycle

Source: EN-ISO 4210 - 2: pedelec designed for use on public roads primarily for means of transportation or leisure.

Consumables

Source: EN 82079-1: any part or material that is needed to continue using or maintain the product.

Continuous power rating

Source: I*SO 15194:2017:* output power specified by the manufacturer at which the motor reaches its thermal equilibrium under the specified ambient conditions.

Decommissioning

Source: DIN 31051: intentional, unlimited interruption in an object's functional capability.

Disc brake

Source: EN 15194:2017: brake in which brake pads are used to grip the lateral faces of a thin disc attached to or incorporated into the wheel hub.

Drive belt

Source: EN 15194:2017: seamless ring belt which is used as a means of transmitting drive force.

Electrical control system

Source: EN 15194:2017: electronic and/or electrical component or an assembly of components provided for installation into a vehicle, together with all electrical connections and associated wiring for the motor electrical power assistance.

Electrically power assisted cycle, pedelec

Source: EN 15194:2017: electrically power assisted cycle pedelec EPAC bicycles, equipped with pedals and an auxiliary electric motor, which cannot be propelled exclusively by means of the auxiliary electric motor, except in start-up assistance mode.

Emergency stop

Source: ISO 13850:2015: to avert arising or reduce existing hazards to persons, damage to machinery or to work in progress; – to be initiated by a single human action.

Fault

Source: EN 13306:2018-02, 6.1: state of an item (4.2.1) characterized by its inability to perform a required function (4.5.1), excluding such inability during preventive maintenance or other scheduled actions or due to lack of external resources.

Folding bicycle

Source: ISO 4210-2: pedelec designed to fold into a compact form, making it easy to transport and store.

Fork steerer

Source: EN 15194:2017: part of a fork that rotates around the steering axis of a pedelec frame head tube. It is normally connected to the fork crown or directly to the fork legs, and is normally the point of connection between the fork and the handlebar stem.

Fracture

Source: EN 15194:2017: unintentional separation into two or more parts.

Maintenance

Source: DIN 31051: maintenance is generally performed at regular intervals and often carried out by trained technical staff. This ensures a maximum service life and low wear and tear for the maintained items. Proper maintenance is often also a pre-requisite for providing a warranty.

Manufacturer

Source: Directive 2006/42/EC on Machinery, 17.05.2006 Any natural or legal person who designs and/or manufactures machinery or partly completed machinery covered by this Directive and is responsible for the conformity of the machinery or the partly completed machinery with this Directive with a view to its being placed on the market, under his own name or trademark or for his own use.

Maximum continuous power rating

Source: ZEG: the maximum continuous power rating is the maximum power for the electric motor output shaft during 30 minutes.

Maximum permitted total weight

Source: EN 15194:2017: weight of the fully assembled pedelec plus the rider and baggage, as specified by the manufacturer.

Maximum saddle height

Source: EN 15194:2017: vertical distance from the ground to the point where the top of the seat surface is intersected by the seat-post axis, measured with the saddle in a horizontal position and with the seat-post set to the minimum insertion-depth mark.

Maximum tyre pressure

Source: EN 15194:2017: maximum tyre pressure recommended by the tyre or rim manufacturer for a safe and efficient performance. If the rim and tyre both indicate a maximum tyre pressure, the maximum inflation pressure is the lower of the two pressures indicated.

Minimum insertion depth

Source: EN 15194:2017: mark indicating the minimum insertion depth of handlebar stem into fork steerer (fork stem) or seat post into frame.

Model year

Source: ZEG: the model year refers to the first production year that the series-manufactured pedelec was manufactured in the version in question and is not always identical with the year of manufacture. The year of manufacture may be before the model year in some cases. If no technical modifications are introduced to the series, production may continue of pedelecs from a previous model year.

Mountain bike, MTB

Source: ISO 4210-2: pedelec designed for use off-road on rough terrain, on public roads, and on public pathways, equipped with a suitably strengthened frame and other components, and, typically, with wide-section tyres with coarse tread patterns and a wide range of transmission gears.

Negative deflection

Negative deflection or sag is fork compression caused by body weight and gear (e.g. a backpack), the rider's position and the frame geometry.

Off-road rough terrain

Source: EN 15194:2017: rough gravel tracks, forest trails and other generally off-road tracks where tree roots and rocks are likely to be encountered.

Operating instructions

Source: ISO/DIS 20607:2018: part of the user information that machine manufacturers provide to machine operators; it contains guidance, instructions and tips related to the use of the machine in all its life cycle phases.

Placing on the market

Source: Directive 2006/42/EC on Machinery, 17.05.2006, Making available for the first time in the Community machinery or partly completed machinery with a view to distribution or use, whether for reward or free of charge.

Pressure point

Source: ZEG: the pressure point on a brake is the point on the brake lever where the brake disc and brake pads respond and the braking process is initiated.

Quick-release device, quick release

Source: EN 15194:2017: lever actuated mechanism that connects, retains or secures a wheel or any other component.

Racing bicycle

Source: ISO 4210-2: bicycle intended for high-speed amateur use on public roads and having a steering assembly with multiple grip positions (allowing for an aerodynamic posture), a multi-speed transmission system, tyre width not greater than 28 mm and a maximum mass of 12 kg for the fully assembled bicycle.

Rebound

The rebound defines the speed at which the fork rebounds after being loaded.

Rechargeable battery, battery

Source: DIN 40729:1985-05: a rechargeable battery is an energy storage device that can store supplied electrical energy as chemical energy (charging) and release it as electrical energy when required (discharging).

Seat post

Source: EN 15194:2017: component that clamps the saddle (with a bolt or assembly) and connects it to the frame.

Shut-off speed

Source: EN 15194:2017: speed reached by the pedelec at the moment the current has dropped to zero or to the no load current value.

Slippage

Source: DIN 75204-1:1992-05: the difference in relation to vehicle speed between the vehicle speed and the speed of its wheels at their circumference.

Spare part

Source: EN 13306:2018-02, 3.5: item intended to replace a corresponding item in order to retain or maintain the original required function of the item.

Suspension fork

Source: EN 15194:2017: front wheel fork incorporating controlled, axial flexibility to reduce the transmission of road-shocks to the rider.

Suspension frame

Source: EN 15194:2017: frame incorporating controlled, vertical flexibility to reduce the transmission of road-shocks to the rider.

Terrain

Source: ISO 4210-1:2023-05, EN 15194:2017: coarse pebble tracks, forest trails and other general off-road tracks where tree roots and rocks are likely to be encountered.

Total deflection

Source: Benny Wilbers, Werner Koch: Neue Fahrwerkstechnik im Detail (New chassis technology in detail): The distance that the wheel travels between an unloaded and a loaded position is called total deflection. When at rest, the vehicle's mass is applied to the springs and reduces the total deflection by the *negative deflection* to the positive deflection.

Wear

Source: DIN 31051: reduction in useful life (4.3.4), caused by chemical and/or physical processes.

Weight of the ready-to-ride pedelec

Source: ZEG: the indicated weight for a ready-to-ride pedelec refers to the weight of a pedelec at the time of sale. The weight of each additional accessory must be added to this weight.

Wheel

Source: ISO 4210-2: unit or combination of hub, rim and spokes or disc, but excluding tyre assembly.

Work environment

Source: EN 9000:2015: set of conditions under which work is performed.

Year of manufacture

Source: ZEG: the year of manufacture is the year in which the pedelec was manufactured. The production period is always from May to July the following year.

14 Appendix

I. Translation of the original EC Declaration of Conformity

Manufacturer

i:SY GmbH Co. KG
Longericher Str. 2
50739 Köln, Germany

Authorised representative for documentation*

Janine Otto
c/o ZEG Zweirad-Einkaufs-Genossenschaft eG
Longericher Strasse 2
50739 Köln, Germany

The machine, pedelec types:

L-01	Skyfly E5 ZR F	City and trekking bicycle
L-02	Skyfly S10	City and trekking bicycle

Year of manufacture 2022 to year of manufacture 2025, complies with the following applicable EU provisions:

- Machinery Directive 2006/42/EC
- RoHS Directive 2011/65/EU Restriction of the use of certain hazardous substances in electrical and electronic equipment
- Electromagnetic Compatibility Directive 2014/30/EU.

The safety objectives in the Low Voltage Directive 2014/35/EU have been met in compliance with Appendix I, No. 1.5.1 of the Machinery Directive 2006/42/EC.

The following harmonised standards have been applied:

- EN 15194:2017 Cycles – Electrically power assisted cycles – EPAC bicycles, **except for Section 6 Instructions for use; harmonised standard EN ISO 20607:2019 is used instead**
- EN ISO 20607: 2019 Safety of machinery – Instruction handbook – General drafting principles.

The following other technical standards have been applied:

- EN 11243:2016-12 Cycles – Pannier racks for bicycles – Requirements and test methods
- EN 17406:2021-11 Classification for bicycles usage
- EN 62133-2:2017-11 Secondary cells and batteries containing alkaline or other non-acid electrolytes. Safety requirements for portable sealed secondary cells, and for batteries made from them, for use in portable applications – Part 2: Lithium.

Cologne, 20.10.2024

……

Georg Honkomp, Managing Director of i:SY GmbH Co. KG

* Community member who is authorised to compile the technical documentation

II. Directive declaration of conformity with RED Directive

LED Remote

Robert Bosch GmbH, Bosch eBike Systems, hereby declares that the LED Remote radio system type complies with Directive 2014/53/EU. The complete EU Declaration of Conformity is available online at:

https://www.bosch-ebike.com/conformity

Kiox 300 and Kiox 500

Robert Bosch GmbH, Bosch eBike Systems, hereby declares that the KIOX 300 and KIOX 500 radio system type complies with Directive 2014/53/EU. The complete EU Declaration of Conformity is available online at:

https://www.bosch-ebike.com/conformity

III. CE Declaration of Conformity

15 Keyword index

A

Articulated shaft,
- servicing 142

B

Back-pedal brake, 38
-braking, 127, 128
Ball bearing,
Position, 35
Battery level indicator, 63
Bead core, 33
Position, 31
Bell,
- checking 137
- using 122
Belt sprocket, 41, 44
Belt, 41, 44
- checking for wear 149
- checking tension 149
- cleaning, 140
- Gates Carbon Drive mobile app 150
Bicycle for young adults, 183
Bike headset, see Steering headset
Bowden cable, 36
- checking, 146
Brake cable, 36
Brake calliper, 37
Position, 37
Brake disc,
- checking, 147
- cleaning, 140
Brake lever,
- cleaning, 140
– servicing, 143
Brake linings,
- checking, 146
- retracting, 84, 96
Brake,
- checking the brake disc 147
- checking the brake linings 147
– checking the pressure point 146
- checking, 138
- cleaning, 138
- securing during transport 64
- using, 127
Cable clip, 36
Cover cap, 36
hydraulic, 36
Insert pin, 36
Knob, 36
mechanical, 36
Union nut, 36
Braking distance, 183
Break in operation, 66
- carrying out, 66
- preparing, 64, 66
Button,
Minus, 49
Push assist, 49

C

Carbon seat post,
– servicing, 142
Carcass, 32
Position, 31
Cargo bike, 183
Cassette,
- cleaning, 140
CE marking, 183
Chain guard, 22
- cleaning, 140
Chain wheel, 41, 44
Chain wheels,
- cleaning, 140
Chain, 41, 44
- checking for wear 148
- checking tension 147
- cleaning, 140
- maintaining, 157
– servicing, 143
Position, 41, 44
Charger,
- disposing of, 174
Chassis, 27
Child seat, 105
City and trekking bicycles, 183
Consumables, 183
Continuous power rating, 183
Control panel,
- cleaning, 140
Conventional valve, see Dunlop valve

D

Decommissioning, 183
Derailleur gears,
- checking 151
- using, 128
Disc brake, 183
Drive belt, 183
Drive system, 41, 44
- switching on, 124, 125
Dunlop valve, see conventional valve

E

eBike Flow,
- registering, 102
Electrical control system, 183
Emergency stop, 183

F

Fault, 183
Folding bicycle, 183
Fork end, 29
Position, 29
Fork leg,
Position, 29
Fork steerer, 29, 184
Position, 29
Fork, 29
- checking 136
– servicing, 138
Position, 22
Spring-loaded, 185
Fracture, 184
Frame, 27
- checking 136
- cleaning, 138
– servicing, 138
Position, 22
French valve, see Presta valve
Front derailleur,
- cleaning, 140
Front light,
Position, 22
Front wheel brake, 38
- braking, 127, 128
Front wheel, see Wheel

G

Gear shift,
- checking 151
- checking the electric gear shift 151
- switching, 133
- using, 128

H

Handbrake, 183
Handlebars, 28
- checking, 71, 151

- cleaning, 138
– servicing, 141
- using 122
Position, 22
Using bar ends 123
Using the multi-position handlebars 122
Handles,
- checking 137
- cleaning, 139
– servicing, 141
- using leather handles 123
Headlight,
- adjusting, 101
- cleaning, 138
Headlight, see Front light
Headset, see Steering headset
Hub axle,
Position, 35
Hub body,
Position, 35
Hub gear,
- checking 152
Hub, 35
- adjusting the ROHLOFF 152
- cleaning, 139
- maintaining, 156
– servicing, 142
Hub, 22
Position, 31
Without additional features, 35
Hydraulic brake system,
- checking 146

I

Initial commissioning, 69

J

Jockey wheel,
- servicing 142

K

Kickstand,
- checking stability 152
– servicing, 141
Position, 22

L

Leather handles,
- cleaning, 139
– servicing, 142
Leather saddle,
- cleaning, 139
– servicing, 142
Level of assistance, 50, 52, 63
ECO, 50, 52
OFF, 50, 52
TOUR, 50, 52
TURBO, 50, 53

M

Maintenance, 184
Manufacturer, 184
Mechanical,
- gear shift, 151
Minimum insertion depth marking, 80, 89
Minimum insertion depth, 184
Minus button, 49
Model year, 184
Mountain bike, 184
Mountain bike, see MTB
MTB, see mountain bike
Mudguard,
- checking, 137
– servicing, 141
Position, 22

N

Negative deflection, 184
Nipple holes,
- checking, 145
Nipple well,
- checking, 145

O

Off-road tyres, 32
Operating instructions, 185

P

Pannier rack battery,
- remove, 118
Pannier rack,
- changing, 121
- checking 137
– servicing, 141
- using, 121
Position, 22
Patented seat post, 40, 43
Pedal, 38
- cleaning, 138
– servicing, 143
Pedelec, 183
- adjusting 78
- before each ride 117, 136
- checking, 144
- cleaning, 138
- commissioning 69
- initial inspection 153
- inspecting (specialist dealer) 153
- installing, 68
- major inspection 154
- shipping 65
- unpacking 68
- using 120
Placing on the market, 185
-Position, 22
Position, 22
Pressure point, 185
Puncture protection belt, 33
Position, 31
Push assist button, 49
Push assist,
- using, 126

Q

Quick release, 185
- checking 137
Position, 35

R

Racing bicycle valve, see Presta valve
Racing bicycle, 185
Rear derailleur,
– servicing, 142
Rear frame damper,
- checking 137
- cleaning, 138
- maintaining, 156
Rear light,
- cleaning, 138
Position, 22
Rear wheel brake, 38
Rear wheel, see Wheel
Rebound, 185
Rechargeable battery, 185
- checking, 69
- disposing of, 174
- remove, 118
- shipping 65
- transporting, 65
Rechargeable battery, see Battery
Reflector,
Position, 22
Reflectors,
- cleaning, 138
Position, 29
Riding light,
- adjusting, 101
- checking, 137
- switching off 125
- switching on 125

Rim brake locking lever 36
Rim, 29, 33
– servicing, 142
Position, 31
Road tyres, 32
Roller brake,
-braking, 127, 128

S

Saddle, 121
- adjusting hardness 87
- changing the seat length, 80, 89
- checking 151
- cleaning, 139
- determining the saddle height, 79, 80, 88, 89
- determining width 87
- selecting hardness 87
- using, 121
Position, 22
Safety guards 13
Safety guards,
- checking 136
Sclaverand valve, see Presta valve
Seat post, 22, 40, 43, 185
- checking 137, 151
- cleaning, 139
- Patented seat post 40, 43
– servicing, 142
- Suspension seat post 40, 43
Shifter,
- cleaning, 140
– servicing, 142
Shut-off speed, 185
Slicks, 32
Slippage, 185
Spare part, 185
Spoke nipples, 34
– servicing, 142
Position, 31
Spokes, 34
- checking, 146
Position, 31
Steering headset, 27
Position, 22
Steering system, 27
Stem, 27
- adjusting 120
- checking, 71, 151
- cleaning, 138
– servicing, 141
Position, 22
Suspension fork, 185
- cleaning, 138
– servicing, 138, 141
Suspension seat post, 40, 43
- cleaning, 138
– servicing, 142
Switching elements,
- cleaning, 139

T

Total deflection 185
Trailer, 106
Tread, 32
Position, 31
Tyre design types, 31
Tyre pressure, 31
- changing, 144
- checking, 144
Tyre size, 31
Tyres, 31
- checking, 145
- cleaning, 139
Position, 31
Tyres,- Tube-type tyres 31

V

Valve, 31
Dunlop valve, 33
Position, 31
Vehicle,
Technical data 18

W

Wear, 186
Wheel, 22, 31, 186
- checking wheel concentricity 137
- checking, 144
- installing, 69, 70
Winter break, see Break in operation
Work environment, 186

Y

Year of manufacture, 186